# Summer, Sun – MAY

MAY
PARASOLS

# Contents

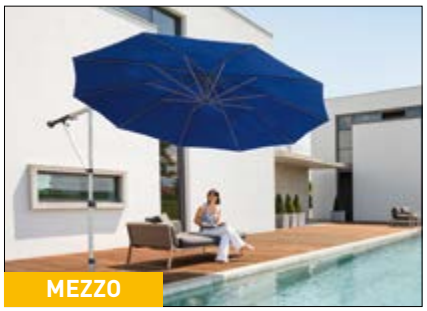
MEZZO

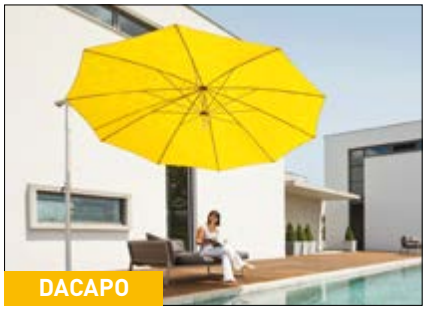
DACAPO

RIALTO

FILIUS

SCHATTELLO

ALBATROS


**Introduction** Page 02
A Family Enterprise

**Quality and Design** Page 04
"Made in Germany"

**MAY Side-Post Parasols** Page 10
Overview

**MEZZO** Page 12
Residential

**DACAPO** Page 28
Residential

**RIALTO** Page 42
Residential

**MAY Centre-Post Parasols** Page 52
Overview

**FILIUS** Page 54
Commercial

**SCHATTELLO** Page 70
Commercial

**ALBATROS** Page 100
Commercial

**Electrical Equipment** Page 122
Heaters, Lighting, Loud-speakers and All-in Kits

**Accessories** Page 132
Side Sheets, Rain Gutters

**Cloth Collection** Page 134
Fabrics and Awning Colours, Borders Product Properties

**Screw-in Ground Anchor** Page 141

**Advertising on Parasols** Page 144
Printing

**The secret of success is to satisfy a customer's needs.**

- **innovative**
- **flexible**
- **upmarket**

**MAY – shade systems**
**Made in Germany**

# MAY – a Family Enterprise

*Anton May, company founder*

In 1983, Anton May and his wife Gertrud May set up a small family business called MAY Gerätebau GmbH. Thanks to an ardent entrepreneurial spirit, a sense of creativity and an intuitive feel for innovation, MAY quickly became a well-established trade name on the market. The company now offers jobs for more than 80 employees  in rural Upper Swabia, South Germany.

Anton May has, meanwhile, passed the business on to his two sons, Karl-Heinz and Klaus-Peter May, who successfully run the family enterprise, combining tradition with modern management.

*Klaus-Peter May*
*Graduate engineer (FH)*
*Graduate business administrator (BA)*

*Karl-Heinz May*
*Industrial mechanic*
*Graduate industrial engineer (FH)*

# MAY – Your Specialist for Parasols

For over 25 years MAY has been a leading trade name for premium parasols. Right from the start, the company has resolutely pursued a policy of transferring creative concepts into technical solutions. The result: multi-purpose parasols, used and proven in all kinds of weather, day by day, worldwide. The experience gained by our long-time employees has contributed to the consistently high standard of all our company objectives – from the manufacturing process to customer service.

Satisfied customers and the pleasure of mutually carving a way to success – that is what motivates us anew every day. Please, allow yourself some time for this catalogue and enjoy the year outdoors with our parasols.

*CAD construction of the mechanism of a MAY parasol*

**It's the small details that make a great difference.**

- **designed in Germany**
- **manufactured in Germany**
- **tried and proven in the whole world**

**MAY – shade systems**
**Made in Germany**

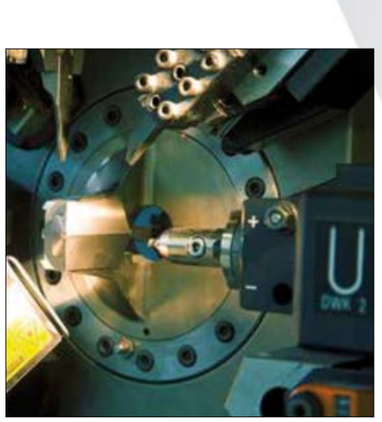

*Precision work in the CNC centre*

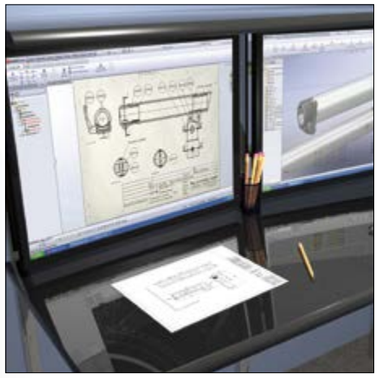

*Designing at a CAD work station*

*Cutting out accurately to a tenth of a millimetre using state-of-the-art computer technology*

*Sewing with finest handicraft*

# References

## Frank Oehler

**Awarded, amongst others, by:**

- **Guide Michelin**
- **Gusto**
- **Gault Millau**
- **Der Feinschmecker**

**And a well-known celebrity in the RTL2 TV-programme "Kitchen Pros in Action")**

*Karl-Heinz May* *Frank Oehler*

SPEISEMEISTEREI
Schloss Hohenheim

# References

**Star-awarded chef**
**Johann Lafer**

- **Gault Millau**
- **Guide Michelin**

**TV Chef of the Year 2006**

**Prize-winning cookbook author**

Johann Lafer
Lafer Stromburg
Le Val d'Or · Stromburg Hotel · Bistro d'Or

*Johann Lafer* *Klaus-Peter May*

# Your Personalized Side-Post Parasol

For us, YOU, our customer, are the measure of all things. No matter how individual your needs, our customized product range is sure to meet your requirements. Simply compose your very own side-post parasol from a variety of options. Choose from the following series:

**MEZZO, DACAPO** and **RIALTO.**
A large range of accessories is available for each parasol type.

**Parasol shapes**
- round
- square
- rectangular
- oval

**Valance options**
- without valance
- straight valance

**Opening and closing mechanism**
- screw tensioner
- crank drive

**Canopy covering fabric**
- MayTex-Acryl 300 g/m²
- MayTex-Poly 200 g/m²

**Awning and border colours**
- 43 awning colours
- 30 binding tape colours

**Frame colours**
- pure white RAL 9010
- EV1 anodized silver-grey

**Type of support mast**
Side-post
- Type MEZZO
- Type DACAPO
- Type RIALTO

# MEZZO

**The easy-to-handle side-post parasol**

- optimal adjustability
- ergonomic handling
- stability while in use
- product video at www.may-online.com

**MAY – shade systems Made in Germany**

Video

# MEZZO MG - Product Information

## MEZZO MG – Standard Model

**Stability while in use**
The practical Mezzo canopy lock allows the user to open and close the parasol when it is in an inclined position and prevents the canopy from swinging in the wind.

**Ergonomic handling**
The operational mechanism of the parasol is conveniently positioned and can easily be adjusted to suit the height of your choice.

**Crank drive**
With the help of a crank Mezzo can be opened and closed, positioned and locked in next to no time.

**High-quality framework materials**
The poles of our parasols are all made of high-quality alloyed, extruded aluminium profiles. Frame surfaces are anodized, highly impact-proof, and available in the colour EV1 natural silver-grey. The spokes are of spring steel and powder-coated, available in white aluminium RAL 9006.

**Canopy covering**
For fabrics and colours
cf. Page 134 onward.

**Valance options**
- without valance
- straight valance

**Installation options**
- mobile
- stationary

cf. Page 22 onward.

**When not in use**
The protective cover provided can easily be slipped over the shade during bad weather periods.

*Ergonomic handling*

*Stability while in use*

**Optimal adjustability**
The canopy can be rotated around all three axes:
360° around the support pole
180° around the cross arm
90° around the joint axis

Such unique freedom of movement makes it possible for the user to adjust the parasol to the changing position of the sun or to use it as a protective screen.

# MEZZO MG – Sizes and Technical Data

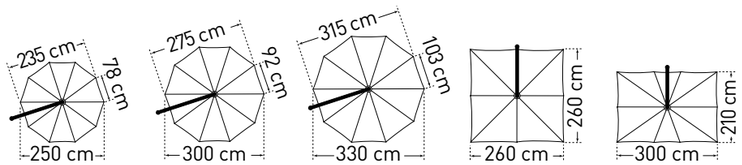


| | MEZZO standard model MG | | Ø 2.5 m | Ø 3.0 m | Ø 3.3 m [1] | 2.6 x 2.6 m | 2.1 x 3.0 m [2] |
|---|---|---|---|---|---|---|---|
| | Segments | | 10 | 10 | 10 | 8 | 10 |
| | Area | $m^2$ | 5 | 7 | 8.5 | 6.75 | 6.25 |
| **A** | without / with valance | cm | 193 | 192 / 182 | 200 | 209 | 195 |
| **B** | without / with valance | cm | 253 | 261 / 251 | 269 | 268 | 261 |
| **C** | without / with valance | cm | 339 | 359 / 369 | 405 | 372 | 351 |
| **D** | without / with valance | cm | 127 | 104 / 114 | 100 | 129 | 150 |
| **E** | | cm | 162 | 162 | 170 | 162 | 162 |
| **F** | | cm | 280 | 305 | 335 | 282 | 272 |
| **G** | | cm | 55 | 55 | 55 | 55 | 55 |
| **H** | | cm | 90 | 90 | 90 | 90 | 90 |
| **I** | without / with valance | cm | 182 / 192 | 182 / 192 | 192 | 192 | 192 |
| **K** | without / with valance | cm | 259 / 269 | 259 / 269 | 278 | 268 | 270 |
| **L** | without / with valance | cm | 30 / 40 | 30 / 40 | 40 | 38 | 40 |
| **M** | without / with valance | cm | 92 / 102 | 93 / 103 | 90 | 69 | 73 |
| **P** | without / with valance | cm | 83 / 74 | 80 / 70 | 73 | 50 | 54 |
| | Weight without packaging | kg | 16 | 17 | 18 | 16 | 16 |
| **Q** | Support pole diameter | mm | outer-Ø 55, pole thickness 3 | | | | |
| | Packaging | | rectangular cardboard box: l= 290 cm, w= 37 cm, h= 15 cm, approx. 3 kg | | | | |
| | Installation base<br>length/width/min. depth | cm | 50 / 50 / 60 | | | | |
| | Minimum ballast<br>incl. full frame pedestal DMZ411 | | 1 layer of concrete slabs XZ40 = approx. 95 kg | | | | |

[1] Additional pedestal weight may be required for windy locations (upwind, sloping sites and so on). Do not use granite base. Pedestals require 2 sets of concrete slabs.
[2] The canopy is vaulted, so that the corner spokes are approx. 9 –18 cm lower than the centre spokes. (cf. sketch)

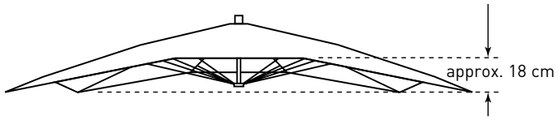


All measurements are to be understood as approximate.

**N** The heights specified are for parasols with MayTex-Acryl covering fabric that are mounted in an anchor tube (DMZ118, DMZ146, DMZ150). The increase in height for parasols with other installation bases can be seen in the list below:

| | | |
|---|---|---|
| Cross pedestal: | DMZ110 | + 6 cm |
| Full frame pedestal: | DMZ411 | + 9 cm |
| Full frame pedestal: | DMZ412 | + 12 cm |
| Full frame pedestal: | DMZ414 | + 16 cm |
| Full frame pedestal: | DMZ420 | + 19 cm |
| Granite base: | DMZ141 | + 10 cm |
| Wheeled pedestal | DMZ282 | + 14 / 15 cm |
| Anchor plate: | DMZ261 | + 4 cm |

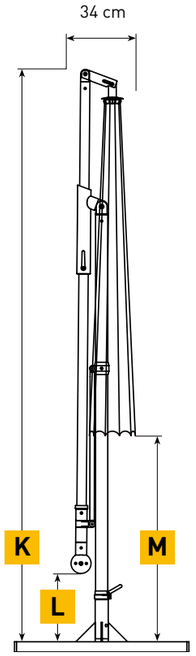


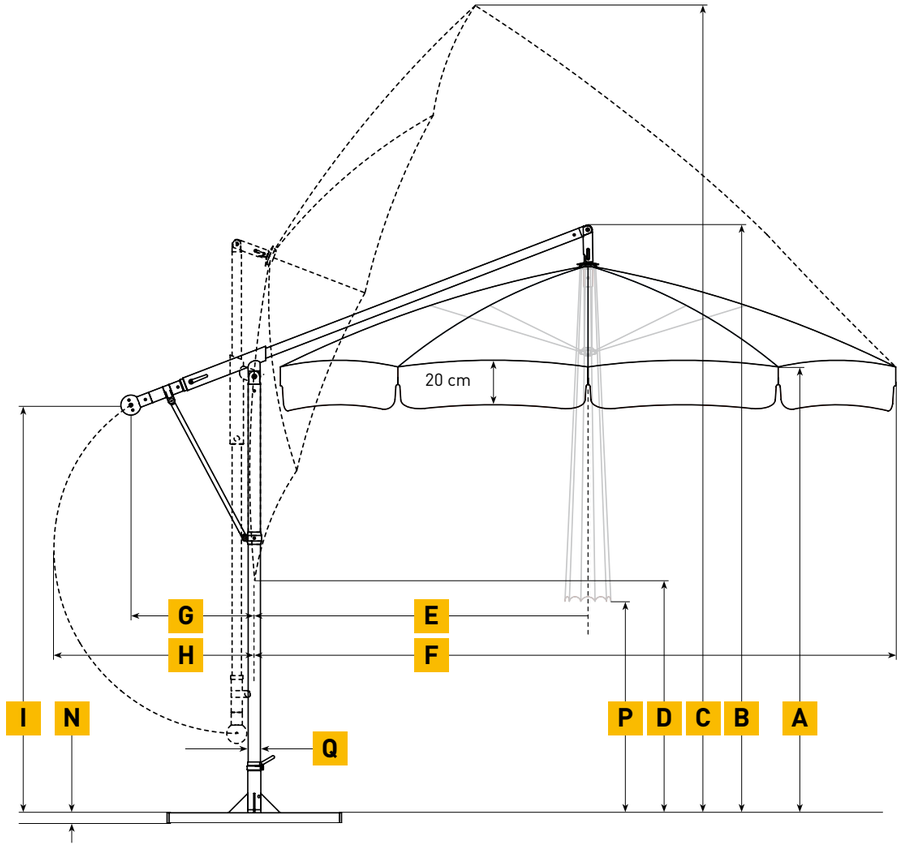


**Adjustable to suit your individual needs**

**1** No matter where the sun is, the parasol canopy can be tilted at any angle for shade and protection, then locked.

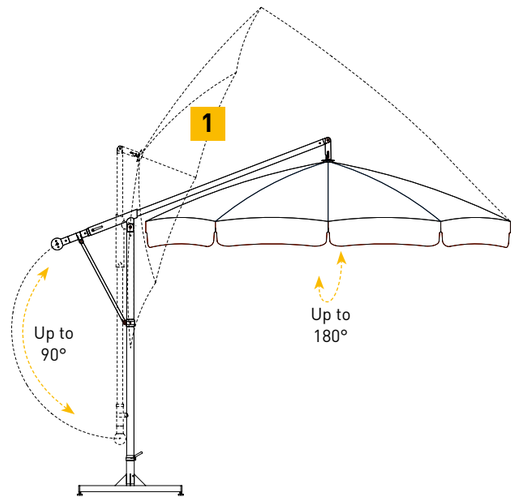

# MEZZO MH – Product Information

## MEZZO MH – with height adjustment

More functions – more benefits! Our model MEZZO MH not only has the standard functions of MEZZO MG, it also offers the possibility of effortless height adjustment. Thanks to a pneumatic spring incorporated in the support pole, the physical strength needed to raise or lower the parasol is effectively reduced to a minimum.

***Optimal adjustability***
*The canopy can be rotated around all three axes:*
*360° around the support pole*
*180° around the cross arm*
*90° around the joint axis*

*Such unique freedom of movement makes it possible for the user to adjust the parasol to the changing position of the sun or to use it as a protective screen.*



*Ergonomic handling*





*Double clamp for height adjustment*

# MEZZO MH – Sizes and Technical Data

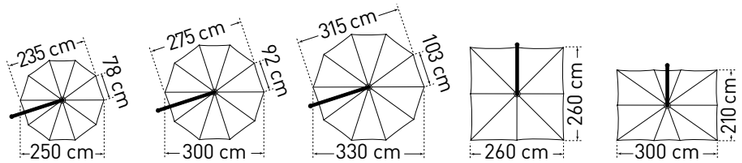


| | MEZZO model MH | | Ø 2.5 m | Ø 3.0 m | Ø 3.3 m [1] | 2.6 x 2.6 m | 2.1 x 3.0 m [2] |
|---|---|---|---|---|---|---|---|
| | Segments | | 10 | 10 | 10 | 8 | 10 |
| | Area | $m^2$ | 5 | 7 | 8.5 | 6.75 | 6.25 |
| **A** | without / with valance | cm | 188 / 222 | 176 / 210 | 163 / 198 | 182 / 217 | 156 / 191 |
| **B** | without / with valance | cm | 235 / 270 | 238 / 273 | 235 / 270 | 241 / 276 | 235 / 270 |
| **C** | without / with valance | cm | 322 / 357 | 335 / 370 | 373 / 408 | 345 / 380 | 323 / 358 |
| **D** | without / with valance | cm | 110 / 145 | 85 / 120 | 80 / 115 | 102 / 137 | 125 / 160 |
| **E** | | cm | 160 | 160 | 166 | 160 | 160 |
| **F** | | cm | 285 | 300 | 328 | 282 | 272 |
| **G** | | cm | 55 | 55 | 55 | 55 | 55 |
| **H** | | cm | 90 | 90 | 90 | 90 | 90 |
| **I** | without / with valance | cm | 165 / 200 | 165 / 200 | 165 / 200 | 165 / 200 | 165 / 200 |
| **K** | without / with valance | cm | 241 / 276 | 241 / 276 | 250 / 285 | 241 / 276 | 241 / 276 |
| **L** | without / with valance | cm | 11 / 46 | 11 / 46 | 11 / 46 | 11 / 46 | 11 / 46 |
| **M** | without / with valance | cm | 82 / 117 | 75 / 110 | 65 / 100 | 42 / 77 | 45 / 80 |
| **P** | without / with valance | cm | 67 / 102 | 60 / 95 | 40 / 75 | 23 / 58 | 27 / 62 |
| | Weight without packaging | kg | 18 | 19 | 20 | 18 | 18 |
| **Q** | Support pole diameter | mm | outer-Ø 55, pole thickness 3 | | | | |
| | Packaging | | rectangular cardboard box: l= 270 cm, b= 37 cm, h= 15 cm, approx. 3 kg | | | | |
| | Installation base<br>length/width/min. depth | cm | 50 / 50 / 60 | | | | |
| | Minimum ballast<br>incl. full frame pedestal DMZ411 | | 1 layer of concrete slabs XZ40 = approx. 95 kg | | | | |

[1] Additional pedestal weight may be required for windy locations (upwind, sloping sites and so on). Do not use granite base. Pedestals require 2 sets of concrete slabs.
[2] The canopy is vaulted, so that the corner spokes are approx. 9 –18 cm lower than the centre spokes. (cf. sketch)

All measurements are to be understood as approximate.

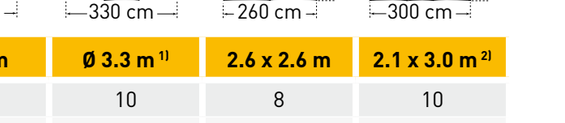


**N** The heights specified are for parasols with MayTex-Acryl covering fabric that are mounted in an anchor tube (DMZ118, DMZ146, DMZ150). The increase in height for parasols with other installation bases can be seen in the list below:

| | | |
|---|---|---|
| Cross pedestal: | DMZ110 | + 6 cm |
| Full frame pedestal: | DMZ411 | + 9 cm |
| Full frame pedestal: | DMZ412 | + 12 cm |
| Full frame pedestal: | DMZ414 | + 16 cm |
| Full frame pedestal: | DMZ420 | + 19 cm |
| Granite base: | DMZ141 | + 10 cm |
| Wheeled pedestal | DMZ282 | + 14 / 15 cm |
| Anchor plate: | DMZ261 | + 4 cm |

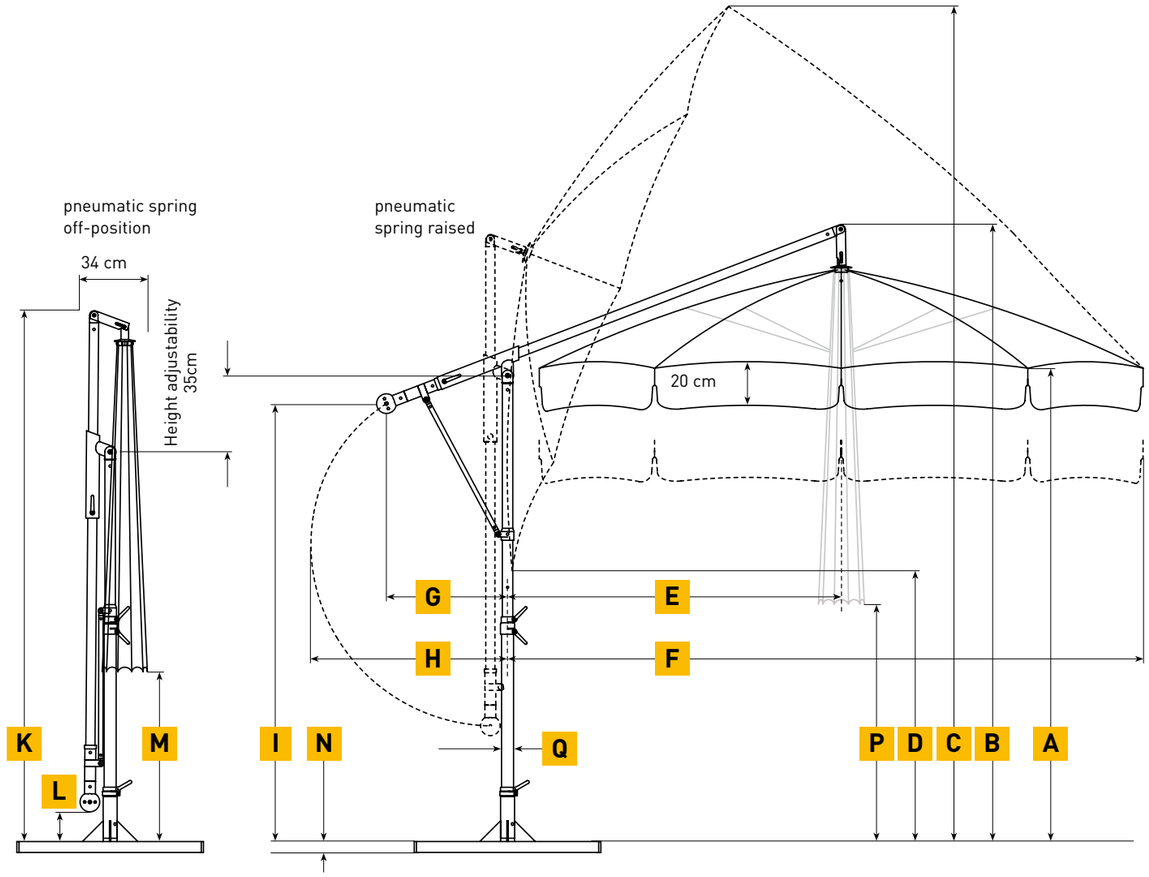


**Adjustable to suit your individual needs**

**1** No matter where the sun is, the parasol canopy can be tilted at any angle for shade and protection, then locked.

**2** Effortless height adjustment thanks to standard incorporation of a pneumatic spring in the support pole (MH).

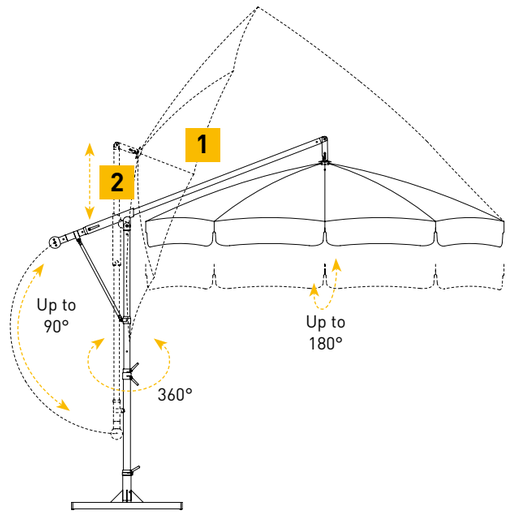

## MEZZO –
## Accessories and Bases

**Additional protective sleeve**
grey tarp material, with aluminium rod for easy handling and zipper.
Please state parasol size.

art. no. **MA130**

## MEZZO –
## mobile installation options

**Cross pedestal**
mounted with screws, frame size 83 x 83 cm,
total height 28 cm, weight approx. 4.5 kg, galvanized.
For standard concrete slabs 40 x 40 x 5 cm.

art. no. **DMZ110**

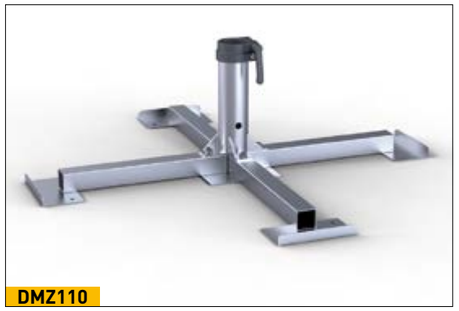


**Full frame pedestal**
frame size 84 x 91 cm, total height 33 cm, height of
frame x = 5 cm, weight approx. 23 kg, galvanized.
For 1 set of standard concrete slabs 40 x 40 x 5 cm.

art. no. **DMZ411**

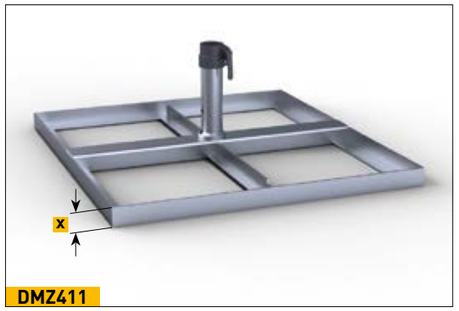


**Full frame pedestal, adjustable for slanting surfaces**
with 4 rubber diagonal support levelling screws,
frame size 84 x 91 cm, total height min. 34 cm,
max. 40 cm, weight approx. 24 kg, galvanized.
For 1 set of standard concrete slabs 40 x 40 x 5 cm.

art. no. **DMZ412**

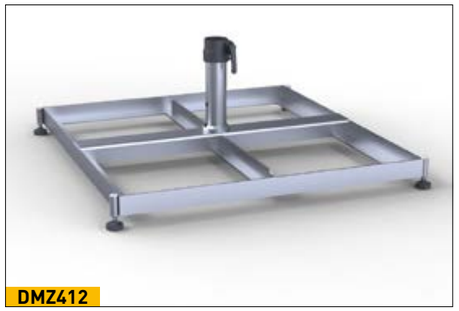


**Full frame pedestal on wheels**
with rubber heavy-duty rollers and fixing brakes,
frame size 84 x 91 cm, total height 40 cm, diameter
of rollers 5 cm, weight approx. 24 kg, galvanized.
For 1 set of standard concrete slabs 40 x 40 x 5 cm.
Attention: wind sensitive!

art. no. **DMZ414**

## MEZZO –
## mobile installation options

✱ **NEW!**
**Full frame pedestal on feet**
for forklift or lift truck transport, frame size
84 x 91 cm, foot height y = 10 cm, weight approx. 25 kg, galvanized.
For 1 set of standard concrete slabs 40 x 40 x 5 cm.

art. no. **DMZ420**

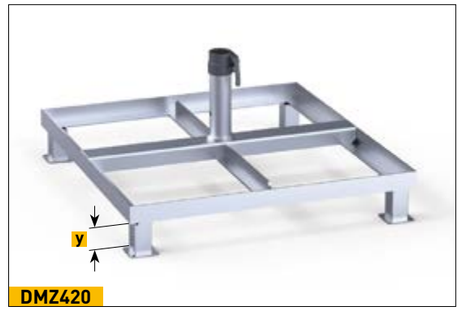


**Concrete slabs**
1 set = 4 slabs, each 40 x 40 x 5 cm, weight per slab: approx. 18 kg,
total weight approx. 72 kg

art. no. **XZ40**

**Granite Base**
Ø approx. 70 cm, 2 pieces, round, grey, polished, 4 recessed grips,
stainless steel surface, weight approx. 100 kg, height x = approx.
10 cm

art. no. **DMZ141**

**Wheeled pedestal**
incl. weights, rubber rollers,
stainless steel locking rod. Colour anthracite,
75 x 75 cm, weight approx. 100 kg.

anthracite

art. no. **DMZ282**

**Wheeled pedestal**
incl. weights, rubber rollers,
stainless steel locking rod. Colour graphite,
75 x 75 cm, weight approx. 100 kg.

graphite

art. no. **DMZ283**

## MEZZO – mobile installation options

**Full frame pedestal**
customized height to fit patio surface, frame size 83 x 83 cm, screw-off upper part, galvanized, weight approx. 23 kg, incl. top plate for winter protection. For 1 set of standard concrete slabs 40 x 40 x 5 cm.
Custom-made (not available on stock).

art. no. **DMZ208**

DMZ208

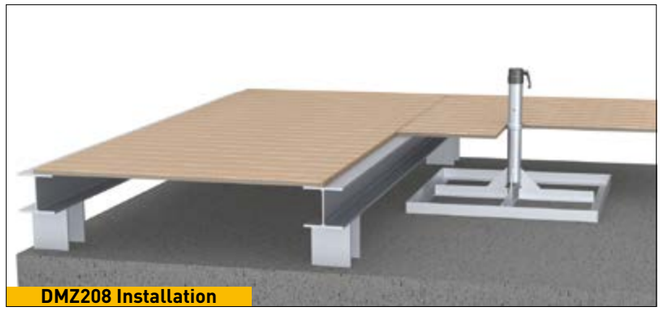
DMZ208 Installation

DMZ208 Installation

## MEZZO – stationary installation options

**Anchor tube to be embedded in concrete**
2 pieces, screw-off upper part, galvanized, weight approx. 4.7 kg, incl. top plate for winter protection.
a = 25 cm, b = 29 cm, x = Ø 8 cm, y = 15 cm.

art. no. **DMZ118**

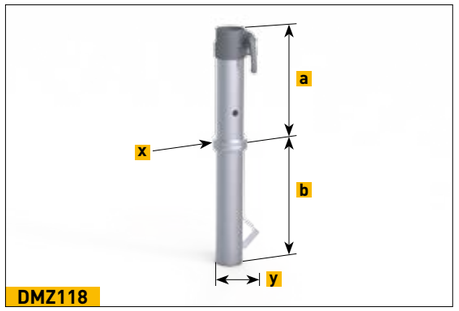

DMZ118

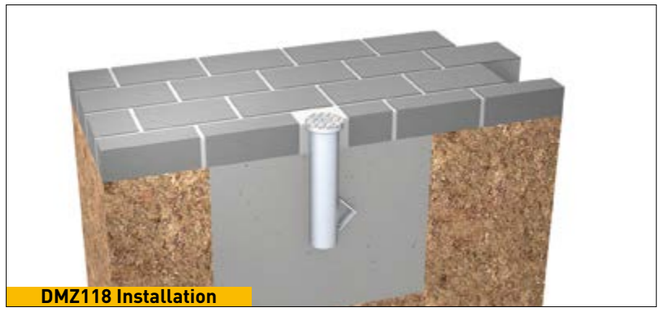
DMZ118 Installation

DMZ118 Installation

**Anchor tube to be embedded in concrete**
for an existing foundation with a bore hole of min. Ø 71 mm, 2 pieces, screw-off upper part. The bore hole is filled with concrete in order to fix the lower part of the anchor tube. The existing foundation must be adequate in size for the designated parasol. Galvanized, weight approx. 3 kg, lower tube square, incl. top plate for winter protection,
a = 25 cm, b = 28.5 cm, x = Ø 8 cm, y = ☐ 5 cm

art. no. **DMZ146**

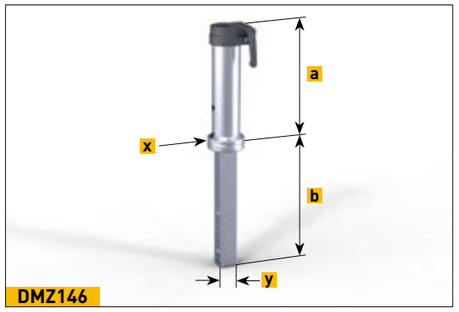

DMZ146

## MEZZO – stationary installation options

**Dowel-anchored plate**
galvanized, weight approx. 5 kg,
a = 27.5 cm, x = Ø 21.5 cm, t = 1.2 cm, z = Ø 1.65 cm.

art. no. **DMZ261**

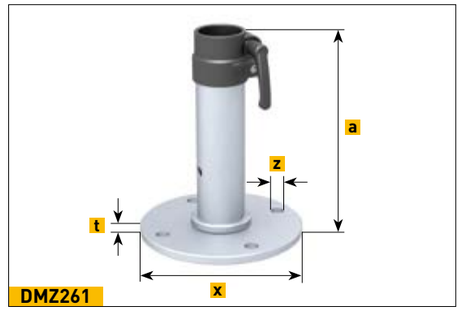

DMZ261

DMZ261 Installation

**Wall bracket**
galvanized, weight approx. 5.5 kg, wall plate 30 x 16 cm,
x = 20 cm, t = 0.8 cm. Bottom of support pole rests on bottom end of anchor tube.

art. no. **DMZ125**

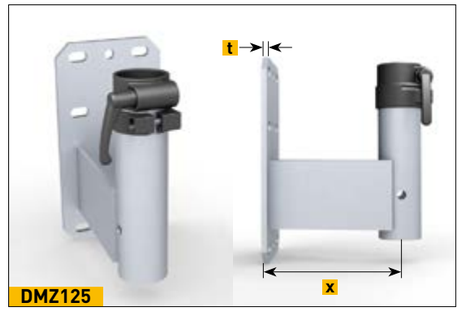

DMZ125

✱ **NEW!**
**Wall pressure plate for DMZ125**
galvanized; to be clamped onto the existing bars (only possible if these are very strong), bore holes for M12 stud bolts (not included in the delivery)

art. no. **200084**

200084

**Wall bracket**
galvanized, weight approx. 6.5 kg, wall plate 30 x 16 cm, x = 20 cm, t = 0.8 cm.

art. no. **DMZ170**

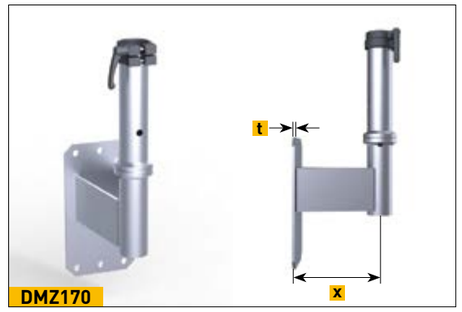

DMZ170

## MEZZO – stationary installation options

✱ **NEW!**
**Corner wall bracket**
galvanized, weight approx. 5.5 kg, x = 5.5 cm, t = 0.8 cm.

art. no. **DMZ172**

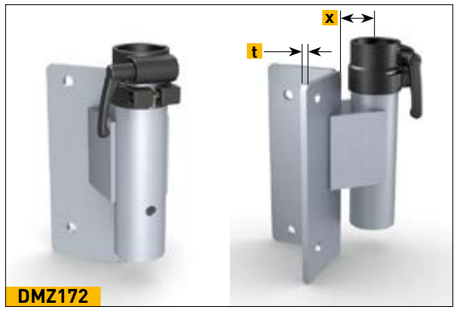

DMZ172

**Dowel-anchored plate**
customized height to fit patio surface, anchor plate 30 x 30 cm, screw-off upper part, galvanized, weight approx. 10 kg, incl. top plate for winter protection.
Custom-made (not available on stock).

art. no. **DMZ129**

DMZ129

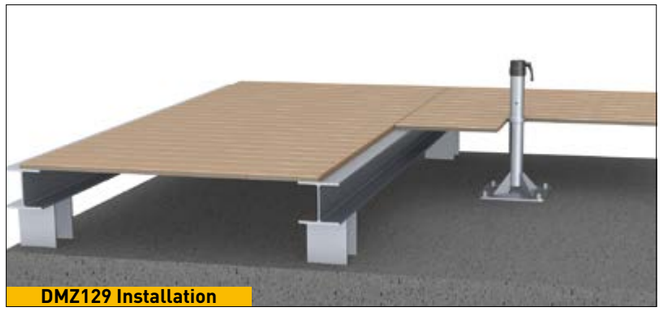
DMZ129 Installation

DMZ129 Installation

✱ **NEW!**
**Flat-roof dowel-anchored plate**
externally insulated roof system, system-conform flat roof connection with liquid plastic; customized height to fit flat roof surface, dowel plate 30 x 30 cm, screw-off upper part, galvanized, weight approx. 13 kg, incl. top plate for winter protection.
Custom-made (not available on stock).

art. no. **DMZ186**

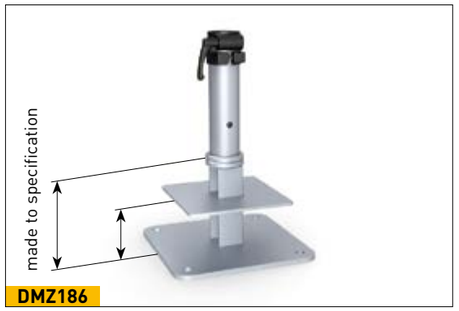

DMZ186

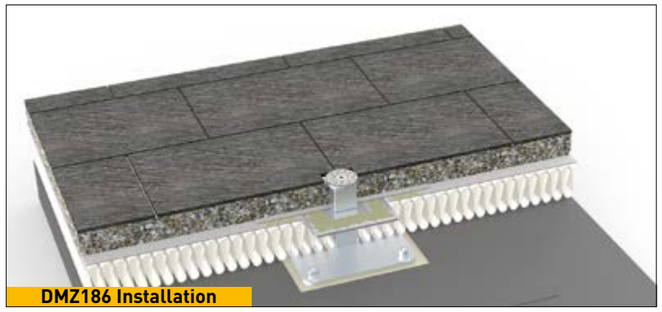
DMZ186 Installation

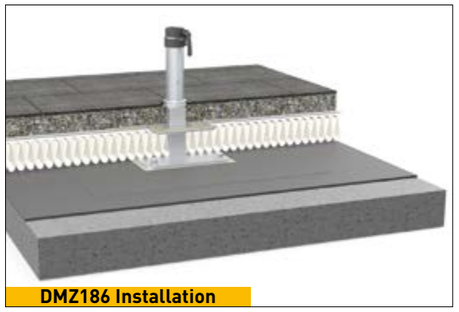
DMZ186 Installation

## MEZZO – stationary installation options

**Anchor bolt**
bolt and nut, fits for DMZ261, DMZ125, DMZ170, DMZ172, DMZ129 and DMZ186; approved for cracked and non-cracked concrete B25 to B55 (old compressive strength classes) C20/25 to C50/60 (new EU classification), also suitable for concrete B15 = C12/15 and natural stone with dense structure. Concrete bore hole Ø 16 x 115 mm. in stainless steel A4 1.4529, package contains 4 bolts, European Technical Approval ETA-05/0069.

art. no. **200900**

200900

**Screw-in ground anchor**
groundscrew with upper anchor tube, incl. standard parts, parts unscrewed on delivery, steel, galvanized acc. DIN EN ISO 1461, weight approx. 27 kg; delivered in two ready-to-assemble parts. For further information cf. page 141.

art. no. **DMZ330**

DMZ330

**Theft pin**
padlock and pin, in stainless steel, for support pole Ø 55 mm. suitable for retrofitting.

art. no. **200194**

200194

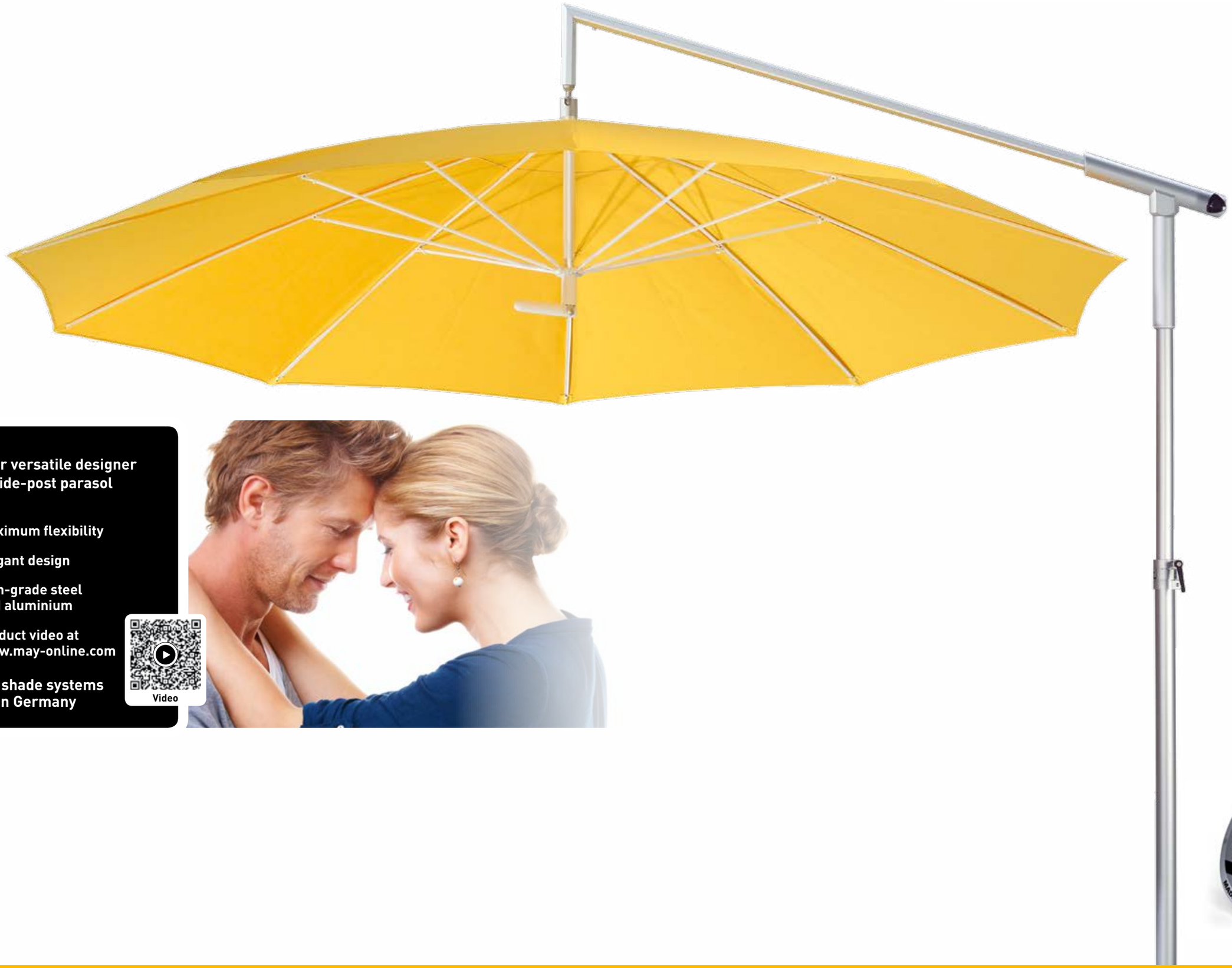

**Our versatile designer side-post parasol**

- maximum flexibility
- elegant design
- high-grade steel and aluminium
- product video at www.may-online.com

**MAY – shade systems**
**Made in Germany**

Video

# DACAPO – Product Information

## DACAPO DG – standard model and DACAPO DK – with crank for cross arm regulation

With the help of a ball-joint mechanism the DACAPO canopy can be tilted to any required angle – depending on the position of the sun – and then locked. The standard incorporation of a pneumatic spring in the parasol mast enables easy height (vertical) adjustment. If requested, parasols can also be supplied with a crank for horizontal operation of the cross arm. In that case order DACAPO DK.

**Complete freedom of movement**
The position of the mast of DACAPO side-post parasols allows completely unencumbered movement in shaded areas. Consequently, you will be able to make full use of your garden, balcony or patio space.

**High-quality framework materials**
The poles of our parasols are all made of high-quality alloyed, extruded aluminium profiles. Frame surfaces are anodized, highly impact–proof, and available in the colour EV1 anodized silver-grey. The spokes are of spring steel and powder-coated, available in silver RAL 9006.

**Ultra-quick opening and closing**
A technical tour de force.
DACAPO can be opened in next to no time and closed again just as quickly. No need to dismount anything. When closed and folded together, the space-saving parasol can easily be stored away. An advantage that no other side-post parasol can beat.

**Maximum movability of the canopy**
The canopy of the parasol can be tilted at any angle, depending on the position of the sun. E.g. set at an angle of 90°, it can protect you from the low rays of the sun or serve as a screen for privacy.

**Canopy covering fabric**
For fabrics and colours
cf. Page 134 onwards.

**Valance options**
- without valance
- straight valance

**Installation options**
- mobile
- stationary

cf. Page 36 onward.

**When not in use**
The protective cover provided can easily be slipped over the shade during bad weather periods.

*DG, Dacapo standard version*

*DK, Dacapo with crank*

*Ball joint*

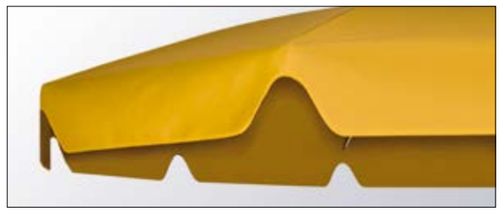
*Straight valance*

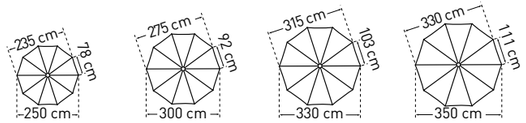


| | DACAPO standard model DG | | Ø 2.5 m | Ø 3.0 m | Ø 3.3 m [3] | Ø 3.5 m [2] [3] |
|---|---|---|---|---|---|---|
| | Segments | | 10 | 10 | 10 | 10 |
| | Area | $m^2$ | 4.9 | 7.1 | 8.5 | 9.6 |
| A | min. / max. | cm | 250 / 290 | 250 / 290 | 250 / 290 | 250 / 290 |
| B | | cm | 160 | 160 | 180 | 180 |
| C | min. / max. | cm | 222 /262 | 222 /262 | 222 /262 | 222 /262 |
| D | | cm | 185 | 185 | 205 | 205 |
| H | min. / max. | cm | 195 / 235 | 195 / 235 | 195 / 235 | 195 / 235 |
| K[1] | min. / max. | cm | 100 / 140 | 80 / 120 | 60 / 100 | 50 / 90 |
| L[1] | min. / max. | cm | 180 / 220 | 170 / 210 | 170 / 210 | 170 / 210 |
| M[1] | min. / max. | cm | 69 / 109 | 69 / 109 | 50 / 90 | 40 / 80 |
| | Weight without packaging | kg | 18 | 19 | 19 | 20 |
| P | Support pole diameter | mm | outer-Ø 55, pole thickness 3 | | | |
| | Packaging | | rectangular cardboard box: l= 235 cm, b= 37 cm, h= 15 cm, approx. 3 kg | | | |
| | Installation base<br>length/width/min. depth | cm | 50 / 50 / 60 | | | |
| | Minimum ballast<br>incl. full frame pedestal DMZ411 | | 1 layer of concrete slabs XZ40 = approx. 95 kg | | | 2 layers of concrete slabs |

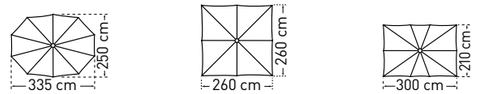


| | DACAPO standard model DG | | 2.5 x 3.35 m [1] [4] | 2.6 x 2.6 m | 2.1 x 3.0 m [4] |
|---|---|---|---|---|---|
| | Segments | | 10 | 8 | 10 |
| | Area | $m^2$ | 6.8 | 6.8 | 6.3 |
| A | min. / max. | cm | 250 / 290 | 255 / 294 | 250 / 290 |
| B | | cm | 180 | 180 | 180 |
| C | min. / max. | cm | 222 / 262 | 223 / 263 | 250 / 262 |
| D | | cm | 205 | 207 | 205 |
| H | min. / max. | cm | 195 / 235 | 195 / 235 | 195 / 235 |
| K[1] | min. / max. | cm | 100 / 140 | 102 / 140 | 115 / 155 |
| L[1] | min. / max. | cm | 171 / 211 | 192 / 231 | 168 / 208 |
| M[1] | min. / max. | cm | 42 / 82 | 42 / 81 | 40 / 80 |
| | Weight without packaging | kg | 20 | 20 | 20 |
| P | Support pole diameter | mm | outer-Ø 55, pole thickness 3 | | |
| | Packaging | | rectangular cardboard box: l= 235 cm, b= 37 cm, h= 15 cm, approx. 3 kg | | |
| | Installation base<br>length/width/min. depth | cm | 50 / 50 / 60 | | |
| | Minimum ballast<br>incl. full frame pedestal DMZ411 | | 1 layer of concrete slabs XZ40 = approx. 95 kg | | |

[1] Sizes without valance: with valance less 20 cm.

[2] Ø 3.5m: in MayTex-Poly only.

[3] Additional pedestal weight may be required for windy locations (upwind, sloping sites and so on). Do not use granite base. Pedestals require 2 sets of concrete slabs.

[4] The canopy is vaulted, so that the corner spokes are approx. 9-18 cm lower than the centre spokes. (cf. sketch).

All measurements are to be understood as approximate.

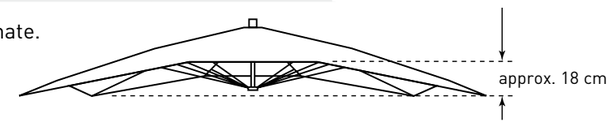




# DACAPO DG – Sizes and Technical Data

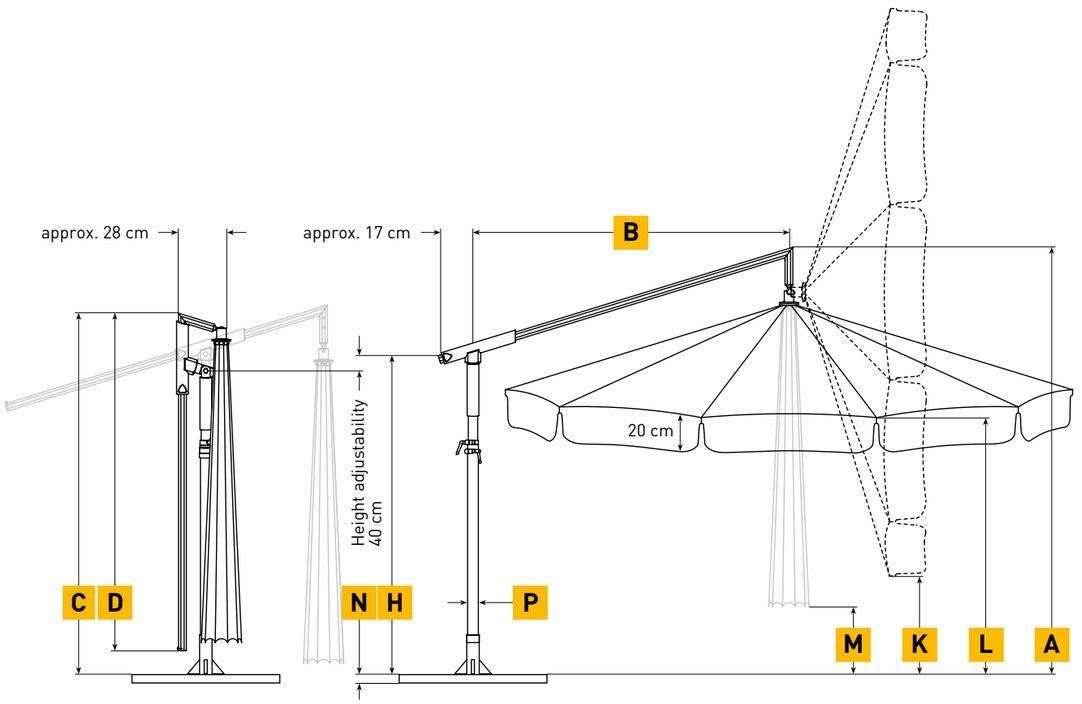


**N** The heights specified are for parasols with MayTex-Acryl covering fabric that are mounted in an anchor tube (DMZ118, DMZ146, DMZ150). The increase in height for parasols with other installation bases can be seen in the list below:

| | | |
|---|---|---|
| Cross pedestal: | DMZ110 | + 6 cm |
| Full frame pedestal: | DMZ411 | + 9 cm |
| Full frame pedestal: | DMZ412 | + 12 cm |
| Full frame pedestal: | DMZ414 | + 16 cm |
| Full frame pedestal: | DMZ420 | + 19 cm |
| Granite base: | DMZ141 | + 10 cm |
| Wheeled pedestal | DMZ282 | + 14 / 15 cm |
| Anchor plate: | DMZ261 | + 4 cm |

**Adjustable to suit your individual needs**

**1** No matter where the sun is, the parasol canopy can be tilted at any angle for shade and protection, then locked. (DG and DK).

**2** Effortless height adjustment thanks to standard incorporation of a pneumatic spring in the support pole (DG and DK).

**3** The cross arm can easily be adjusted (DG).

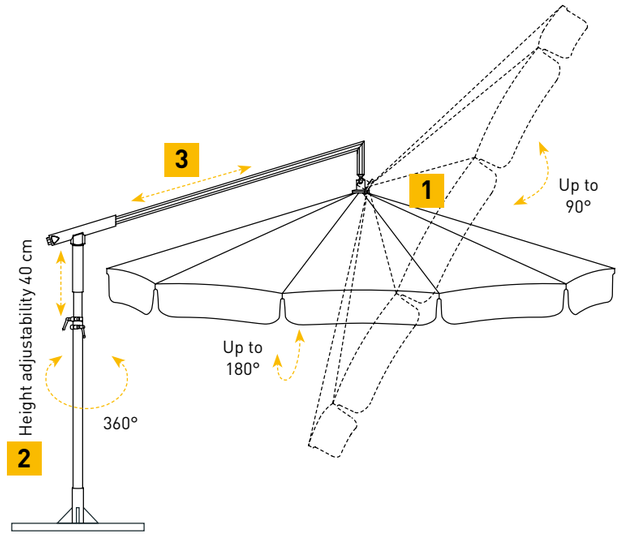

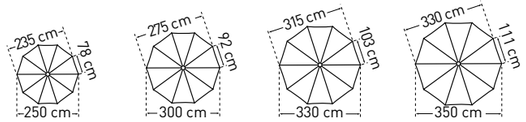


| | DACAPO with crank DK | | Ø 2.5 m | Ø 3.0 m | Ø 3.3 m [3] | Ø 3.5 m [2] [3] |
|---|---|---|---|---|---|---|
| | Segments | | 10 | 10 | 10 | 10 |
| | Area | $m^2$ | 4.9 | 7.1 | 8.5 | 9.6 |
| A | min. / max. | cm | 240 / 280 | 240 / 280 | 245 / 285 | 245 / 285 |
| B | | cm | 160 | 160 | 180 | 180 |
| C | min. / max. | cm | 212 / 252 | 212 / 252 | 210 / 250 | 210 / 250 |
| D | | cm | 185 | 185 | 205 | 205 |
| H | min. / max. | cm | 185 / 225 | 185 / 225 | 185 / 225 | 185 / 225 |
| K[1] | min. / max. | cm | 90 / 130 | 68 / 108 | 46 / 101 | 33 / 73 |
| L[1] | min. / max. | cm | 170 / 210 | 160 / 200 | 164 / 204 | 160 / 200 |
| M[1] | min. / max. | cm | 59 / 99 | 50 / 99 | 40 / 80 | 30 / 70 |
| | Weight without packaging | kg | 18 | 19 | 19 | 20 |
| P | Support pole diameter | mm | outer-Ø 55, pole thickness 3 | | | |
| | Packaging | | rectangular cardboard box: l= 235 cm, b= 37 cm, h= 15 cm, approx. 3 kg | | | |
| | Installation base<br>length/width/min. depth | cm | 50 / 50 / 60 | | | |
| | Minimum ballast<br>incl. full frame pedestal DMZ411 | | 1 layer of concrete slabs XZ40 = approx. 95 kg | | | 2 layers of concrete slabs |

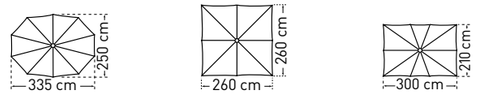


| | DACAPO with crank DK | | 2.5 x 3.35 m [1] [4] | 2.6 x 2.6 m | 2.1 x 3.0 m [4] |
|---|---|---|---|---|---|
| | Segments | | 10 | 8 | 10 |
| | Area | $m^2$ | 6.8 | 6.8 | 6.3 |
| A | min. / max. | cm | 245 / 285 | 245 / 284 | 245 / 280 |
| B | | cm | 180 | 180 | 180 |
| C | min. / max. | cm | 210 / 250 | 213 / 253 | 210 / 250 |
| D | | cm | 205 | 207 | 205 |
| H | min. / max. | cm | 185 / 225 | 185 / 225 | 185 / 225 |
| K[1] | min. / max. | cm | 90 / 130 | 92 / 130 | 107 / 147 |
| L[1] | min. / max. | cm | 160 / 200 | 182 / 221 | 180 / 220 |
| M[1] | min. / max. | cm | 32 / 72 | 32 / 71 | 30 / 70 |
| | Weight without packaging | kg | 20 | 20 | 20 |
| P | Support pole diameter | mm | outer-Ø 55, pole thickness 3 | | |
| | Packaging | | rectangular cardboard box: l= 235 cm, b= 37 cm, h= 15 cm, approx. 3 kg | | |
| | Installation base<br>length/width/min. depth | cm | 50 / 50 / 60 | | |
| | Minimum ballast<br>incl. full frame pedestal DMZ411 | | 1 layer of concrete slabs XZ40 = approx. 95 kg | | |

[1] Sizes without valance: with valance less 20 cm.

[2] Ø 3.5m: in MayTex-Poly only.

[3] Additional pedestal weight may be required for windy locations (upwind, sloping sites and so on). Do not use granite base. Pedestals require 2 sets of concrete slabs.

[4] The canopy is vaulted, so that the corner spokes are approx. 9-18 cm lower than the centre spokes. (cf. sketch).

All measurements are to be understood as approximate.

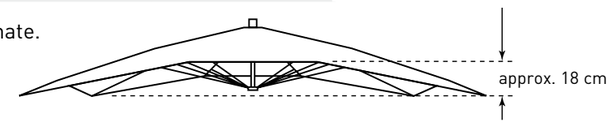




# DACAPO DK – Sizes and Technical Data

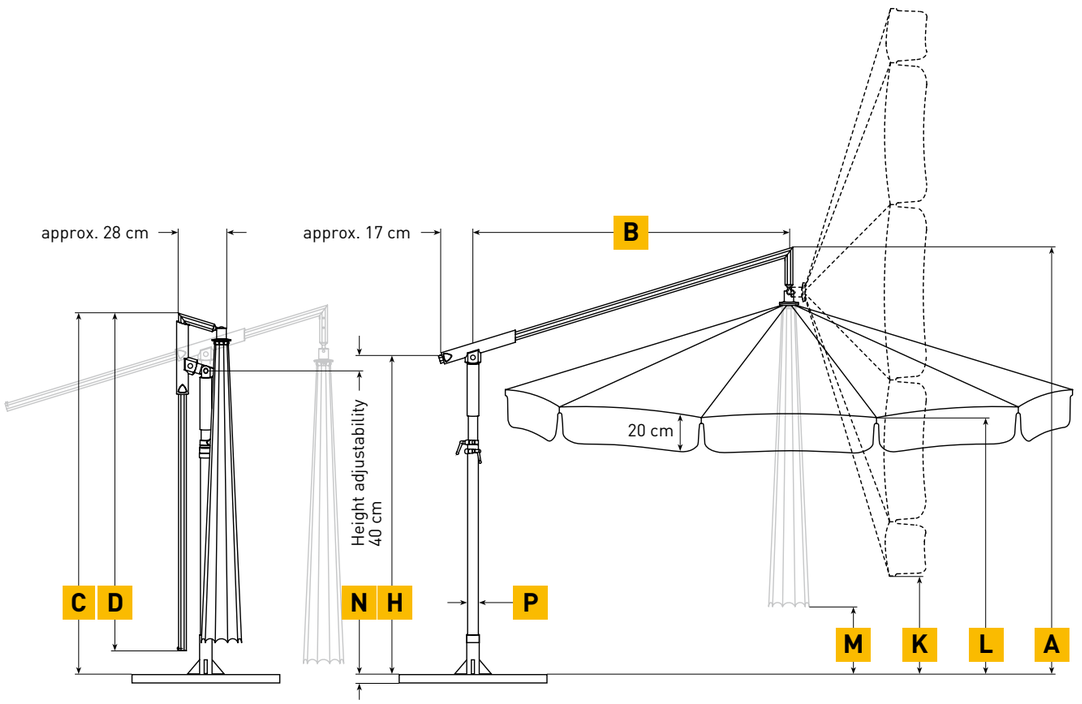


**N** The heights specified are for parasols with MayTex-Acryl covering fabric that are mounted in an anchor tube (DMZ118, DMZ146, DMZ150). The increase in height for parasols with other installation bases can be seen in the list below:

| | | |
|---|---|---|
| Cross pedestal: | DMZ110 | + 6 cm |
| Full frame pedestal: | DMZ411 | + 9 cm |
| Full frame pedestal: | DMZ412 | + 12 cm |
| Full frame pedestal: | DMZ414 | + 16 cm |
| Full frame pedestal: | DMZ420 | + 19 cm |
| Granite base: | DMZ141 | + 10 cm |
| Wheeled pedestal | DMZ282 | + 14 / 15 cm |
| Anchor plate: | DMZ261 | + 4 cm |

**Adjustable to suit your individual needs**

**1** No matter where the sun is, the parasol canopy can be tilted at any angle for shade and protection, then locked. (DG and DK).

**2** Effortless height adjustment thanks to standard incorporation of a pneumatic spring in the support pole (DG and DK).

**3** On special request, additional crank for easy horizontal adjustment (DK).

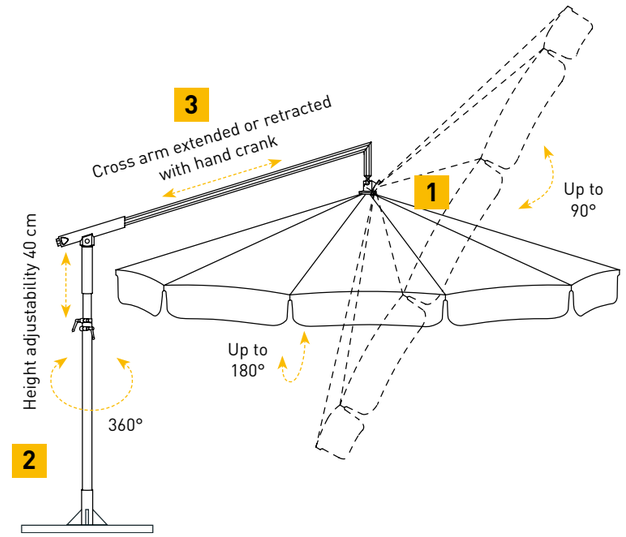

## DACAPO–
## Accessories and Bases

**Additional protective sleeve**
grey tarp material, with aluminium rod for easy handling and zipper.
Please state parasol size.

art. no. **MA130**

## DACAPO –
## mobile installation options

**Cross pedestal**
mounted with screws, frame size 83 x 83 cm,
total height 28 cm, weight approx. 4.5 kg, galvanized.
For standard concrete slabs 40 x 40 x 5 cm.

art. no. **DMZ110**

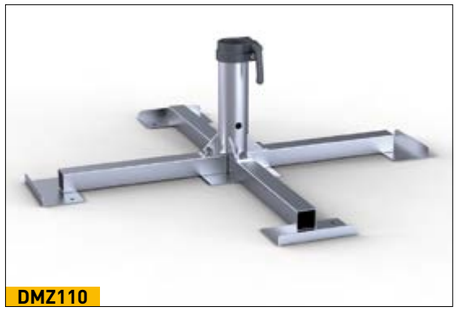


**Full frame pedestal**
frame size 84 x 91 cm, total height 33 cm, height of
frame x = 5 cm, weight approx. 23 kg, galvanized.
For 1 set of standard concrete slabs 40 x 40 x 5 cm.

art. no. **DMZ411**

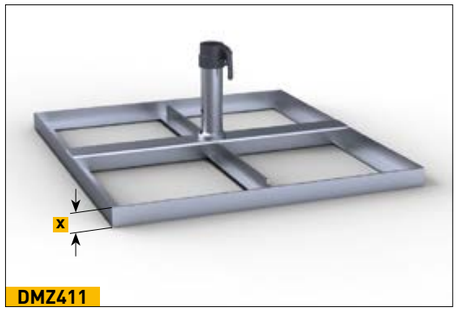


**Full frame pedestal, adjustable for slanting surfaces**
with 4 rubber diagonal support levelling screws,
frame size 84 x 91 cm, total height min. 34 cm,
max. 40 cm, weight approx. 24 kg, galvanized.
For 1 set of standard concrete slabs 40 x 40 x 5 cm.

art. no. **DMZ412**

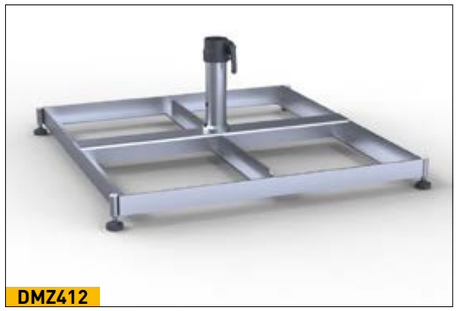


**Full frame pedestal on wheels**
with rubber heavy-duty rollers and fixing brakes,
frame size 84 x 91 cm, total height 40 cm, diameter
of rollers 5 cm, weight approx. 24 kg, galvanized.
For 1 set of standard concrete slabs 40 x 40 x 5 cm.
Attention: wind sensitive!

art. no. **DMZ414**

## DACAPO –
## mobile installation options

✱ **NEW!**
**Full frame pedestal on feet**
for forklift or lift truck transport, frame size
84 x 91 cm, foot height y = 10 cm, weight approx. 25 kg, galvanized.
For 1 set of standard concrete slabs 40 x 40 x 5 cm.

art. no. **DMZ420**

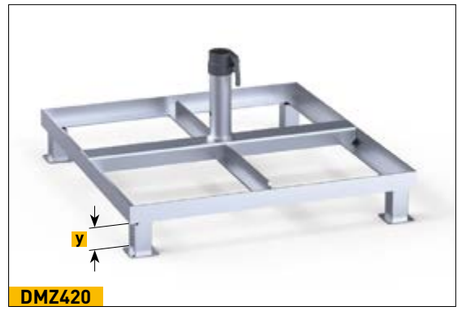


**Concrete slabs**
1 set = 4 slabs, each 40 x 40 x 5 cm, weight per slab: approx. 18 kg,
total weight approx. 72 kg

art. no. **XZ40**

**Granite Base**
Ø approx. 70 cm, 2 pieces, round, grey, polished, 4 recessed grips,
stainless steel surface, weight approx. 100 kg, height x = approx.
10 cm

art. no. **DMZ141**

**Wheeled pedestal**
incl. weights, rubber rollers,
stainless steel locking rod. Colour anthracite,
75 x 75 cm, weight approx. 100 kg.

art. no. **DMZ282**

**Wheeled pedestal**
incl. weights, rubber rollers,
stainless steel locking rod. Colour graphite,
75 x 75 cm, weight approx. 100 kg.

art. no. **DMZ283**

## DACAPO – mobile installation options

**Full frame pedestal**
customized height to fit patio surface, frame size 83 x 83 cm, screw-off upper part, galvanized, weight approx. 23 kg, incl. top plate for winter protection. For 1 set of standard concrete slabs 40 x 40 x 5 cm.
Custom-made (not available on stock).

art. no. **DMZ208**

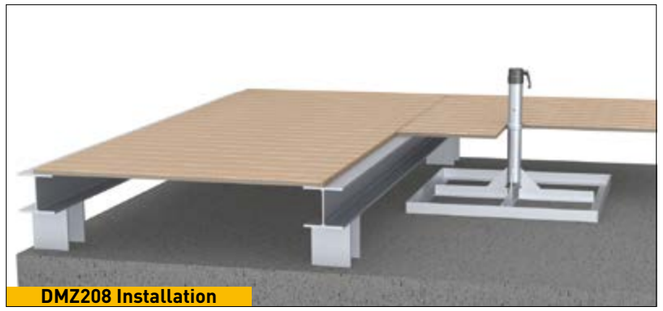

## DACAPO – stationary installation options

**Anchor tube to be embedded in concrete**
2 pieces, screw-off upper part, galvanized, weight approx. 4.7 kg, incl. top plate for winter protection.
a = 25 cm, b = 29 cm, x = Ø 8 cm, y = 15 cm.

art. no. **DMZ118**

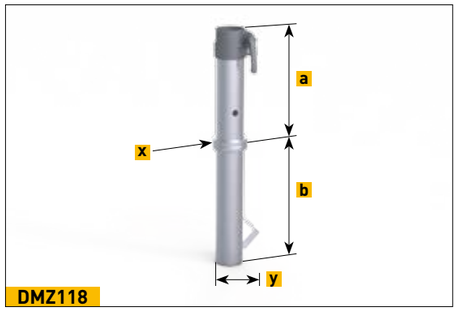


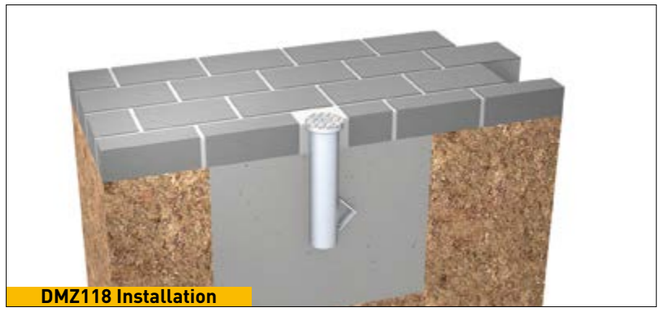

**Anchor tube to be embedded in concrete**
for an existing foundation with a bore hole of min. Ø 71 mm, 2 pieces, screw-off upper part. The bore hole is filled with concrete in order to fix the lower part of the anchor tube. The existing foundation must be adequate in size for the designated parasol. Galvanized, weight approx. 3 kg, lower tube square, incl. top plate for winter protection,
a = 25 cm, b = 28.5 cm, x = Ø 8 cm, y = ☐ 5 cm

art. no. **DMZ146**

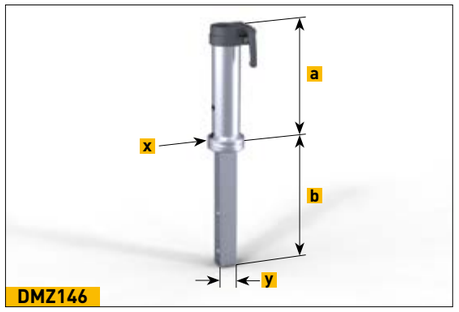


## DACAPO– stationary installation options

**Dowel-anchored plate**
galvanized, weight approx. 5 kg,
a = 27.5 cm, x = Ø 21.5 cm, t = 1.2 cm, z = Ø 1.65 cm.

art. no. **DMZ261**

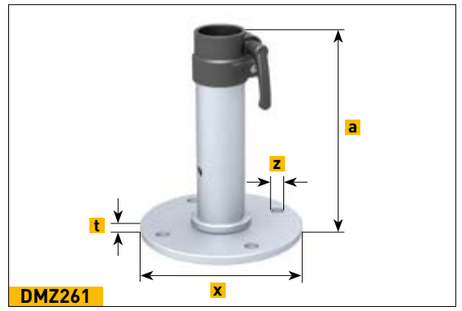

**Wall bracket**
galvanized, weight approx. 5.5 kg, wall plate 30 x 16 cm,
x = 20 cm, t = 0.8 cm. Bottom of support pole rests on bottom end of anchor tube.

art. no. **DMZ125**

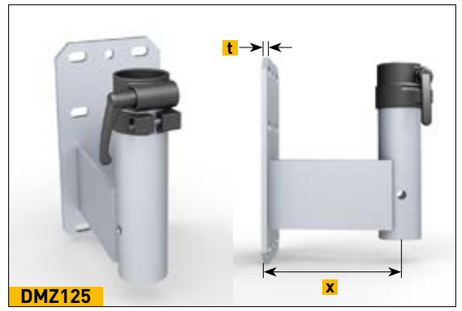


✱ **NEW!**
**Wall pressure plate for DMZ125**
galvanized; to be clamped onto the existing bars (only possible if these are very strong), bore holes for M12 stud bolts (not included in the delivery)

art. no. **200084**

**Wall bracket**
galvanized, weight approx. 6.5 kg, wall plate 30 x 16 cm, x = 20 cm, t = 0.8 cm.

art. no. **DMZ170**

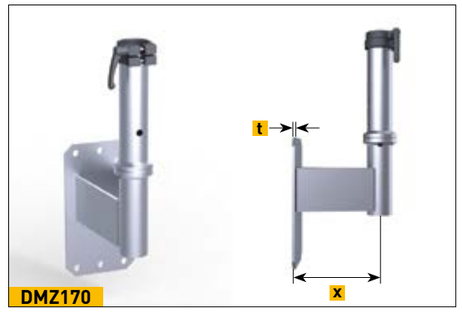

## DACAPO – stationary installation options

✱ **NEW!**
**Corner wall bracket**
galvanized, weight approx. 5.5 kg, x = 5.5 cm, t = 0.8 cm.

art. no. **DMZ172**

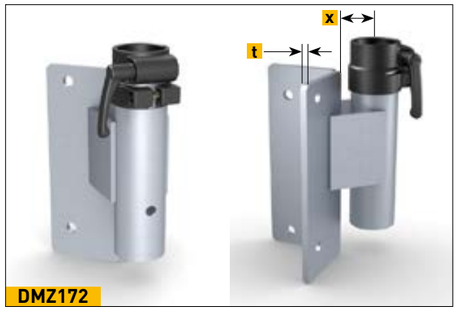

DMZ172

**Dowel-anchored plate**
customized height to fit patio surface, anchor plate 30 x 30 cm, screw-off upper part, galvanized, weight approx. 10 kg, incl. top plate for winter protection.
Custom-made (not available on stock).

art. no. **DMZ129**

DMZ129

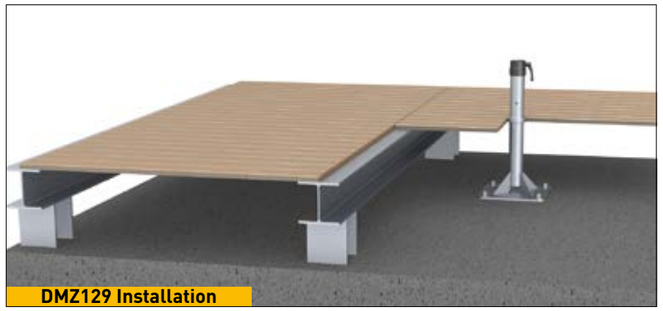
DMZ129 Installation

DMZ129 Installation

✱ **NEW!**
**Flat-roof dowel-anchored plate**
externally insulated roof system, system-conform flat roof connection with liquid plastic; customized height to fit flat roof surface, dowel plate 30 x 30 cm, screw-off upper part, galvanized, weight approx. 13 kg, incl. top plate for winter protection.
Custom-made (not available on stock).

art. no. **DMZ186**

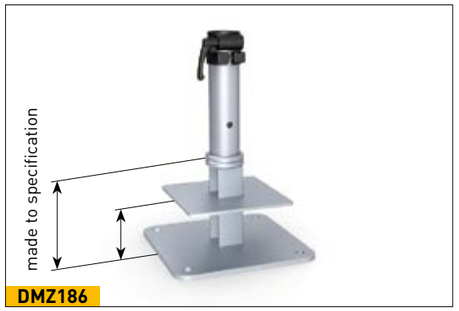

DMZ186

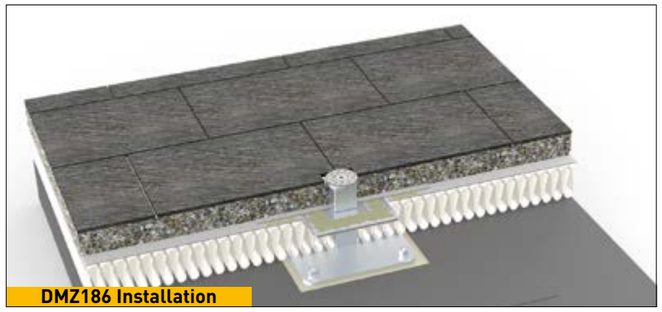
DMZ186 Installation

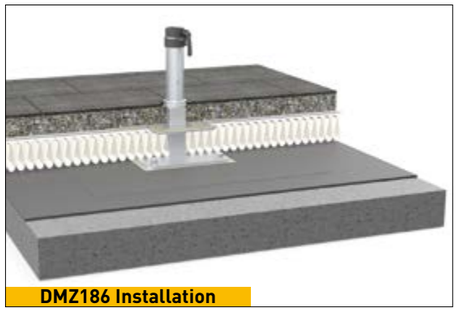
DMZ186 Installation

## DACAPO – stationary installation options

**Anchor bolt**
bolt and nut, fits for DMZ261, DMZ125, DMZ170, DMZ172, DMZ129 and DMZ186; approved for cracked and non-cracked concrete B25 to B55 (old compressive strength classes) C20/25 to C50/60 (new EU classification), also suitable for concrete B15 = C12/15 and natural stone with dense structure. Concrete bore hole Ø 16 x 115 mm. in stainless steel A4 1.4529, package contains 4 bolts, European Technical Approval ETA-05/0069.

art. no. **200900**

200900

**Screw-in ground anchor**
groundscrew with upper anchor tube, incl. standard parts, parts unscrewed on delivery, steel, galvanized acc. DIN EN ISO 1461, weight approx. 27 kg; delivered in two ready-to-assemble parts. For further information cf. page 141.

art. no. **DMZ330**

DMZ330

**Theft pin**
padlock and pin, in stainless steel, for support pole Ø 55 mm. suitable for retrofitting.

art. no. **200194**

200194

# RIALTO

RIALTO stands for atmosphere and architectural style – both indoors and outside. This impressive parasol concept can be put to a variety of uses to suit private, public or business requirements. Furthermore, it can create a welcoming ambience in large-area squares, exhibitions, stylish venues and foyers.

**Our upmarket side-post parasol up to Ø 4 m**

- exclusive and graceful
- designer shade grouping
- optional pivot system

**MAY – shade systems**
**Made in Germany**

# RIALTO – Product Information

## RIALTO RG – standard model
## RIALTO RP – canopy with pivot system

**Operating the parasol**
with removable stainless steel crank.

**High-quality framework materials**
The poles of our parasols are all made of high-quality alloyed, extruded aluminium profiles. Frame surfaces are powder-coated, highly impact-proof, and available in pure white RAL 9010. Special colours available on request.
- support pole Ø 76 x 3 mm
- spoke dimensions 30 x 15 x 2 mm/ 25 x 15 x 2 mm
- support strut dimensions 25 x 15 x 2 mm

**Frame joints**
For us perfection in workmanship is an absolute must. Therefore, all moving axes are fitted with bolts. This extravagant technology ensures maximum stability and durability as well as easy execution of repairs.

**Canopy covering fabric**
Due to a special self-tensioning telescopic spring system, the awning remains perfectly taut, even after years of usage. The canopy covering can easily be exchanged by means of a practical hooking system. For fabrics and awning colours see Page 94 onward.

**360° Rotation**
All our anchoring systems are equipped with a special clamp that allows the parasol to be rotated completely to follow the path of the sun.

**Shade grouping**
Specially designed for large-area outdoor catering. The sturdy Rialto mast can hold up to 4 elegantly grouped shades. A real eye-catcher for the patio with a difference!

**Installation options**
- mobile
- stationary
  cf. Page 48 onward.

**When not in use**
The protective cover provided can easily be slipped over the shade during bad weather periods.

*Operation*

*Canopy covering*

*Frame (single shade / triple shade)*

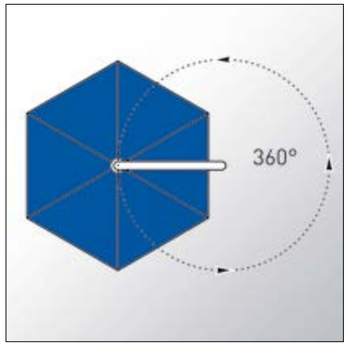

*360° rotation*

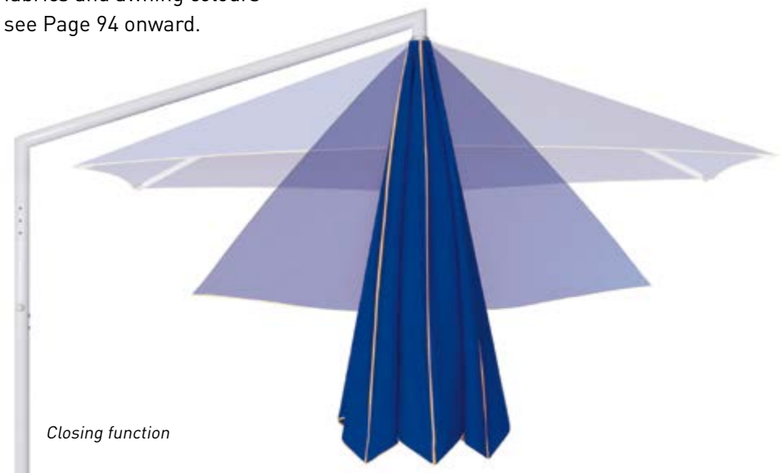
*Closing function*

*Crank to fix the tilted canopy*

*Pivot system*

*Flexible tilt function (max. 30°)*

## RIALTO RP – with pivot system

The parasol can be moved and adjusted to the position of the sun with a removable crank. Thanks to an innovative pivot system the parasol can smoothly be tilted to an angle of max. 30° and rotated completely. The canopy is fixed by turning the crank clockwise.

*Wall mount for strain relief*

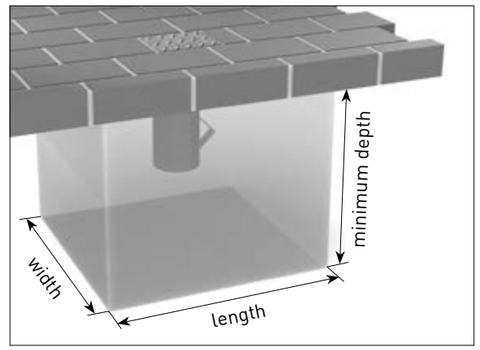


*3D view of installation base with top plate for winter protection. Base must be frost-proof and enlarged if the ground is unstable.*

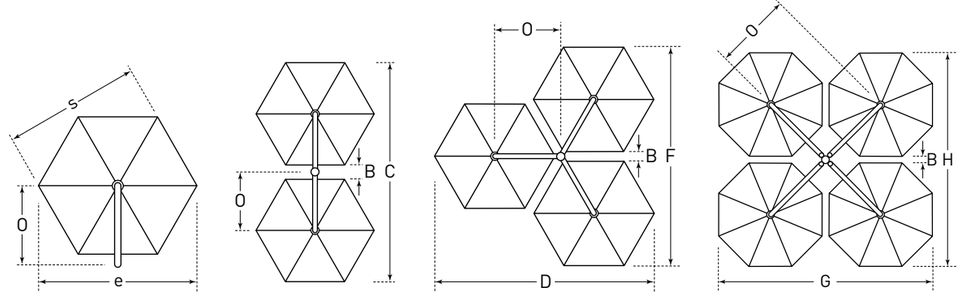


| | | Single with 6 segments | | | Double with 6 segments | | | Triple with 6 segments | | | Quad with 8 segments | | |
|---|---|---|---|---|---|---|---|---|---|---|---|---|---|
| **e** | **m** | **Ø 3.0** | **Ø 3.5** | **Ø 4.0** | **Ø 3.0** | **Ø 3.5** | **Ø 4.0** | **Ø 3.0** | **Ø 3.5** | **Ø 4.0** | **Ø 3.0** | **Ø 3.5** | **Ø 4.0** |
| **s** | cm | 260 | 300 | 345 | 260 | 300 | 345 | 260 | 300 | 345 | 275 | 325 | 360 |
| **B** | cm | - | - | - | 90 | 53 | 45 | 50 | 40 | 40 | 40 | 25 | 20 |
| **C** | cm | - | - | - | 610 | 660 | 740 | - | - | - | - | - | - |
| **D = F** | cm | - | - | - | - | - | - | 570 | 650 | 740 | - | - | - |
| **G = H** | cm | - | - | - | - | - | - | - | - | - | 600 | 675 | 760 |
| **O** | cm | 170 | 190 | 220 | 175 | 190 | 220 | 175 | 190 | 220 | 220 | 240 | 270 |
| **P** | cm | 185 | 206 | 235 | 185 | 206 | 235 | 185 | 206 | 235 | 235 | 260 | 290 |
| **Q** | cm | 20 | 15 | 20 | 15 | 15 | 20 | 15 | 15 | 20 | 70 | 65 | 70 |
| **R** | cm | 155 | 180 | 205 | 155 | 180 | 205 | 155 | 180 | 205 | 120 | 135 | 155 |
| | Weight* | 27 kg | 29 kg | 31 kg | 49 kg | 54 kg | 58 kg | 60 kg | 66 kg | 72 kg | 86 kg | 94 kg | 102 kg |
| | Support Pole | outer Ø 76 mm, pole thickness 3 mm | | | | | | | | | | | |

*without packaging

| **e** | **m** | **Ø 3.0 m** | **Ø 3.5 m** | **Ø 4.0 m** |
|---|---|---|---|---|
| **K** | cm | 100 | 75 | 55 |
| **L** | cm | 195 | 195 | 195 |
| **M** | cm | 200 | 200 | 200 |
| **N1** without valance | cm | 270 | 280 | 285 |
| **N2** with valance | cm | 290 | 300 | 305 |

**Minimum ballast** required for mobile pedestals:
1 layer of concrete slabs 50 x 50 x 5 cm.

**Size of installation base** required for all parasol sizes: 50 x 50 x 70 cm.
Base must be frost-proof and enlarged if the ground is unstable.

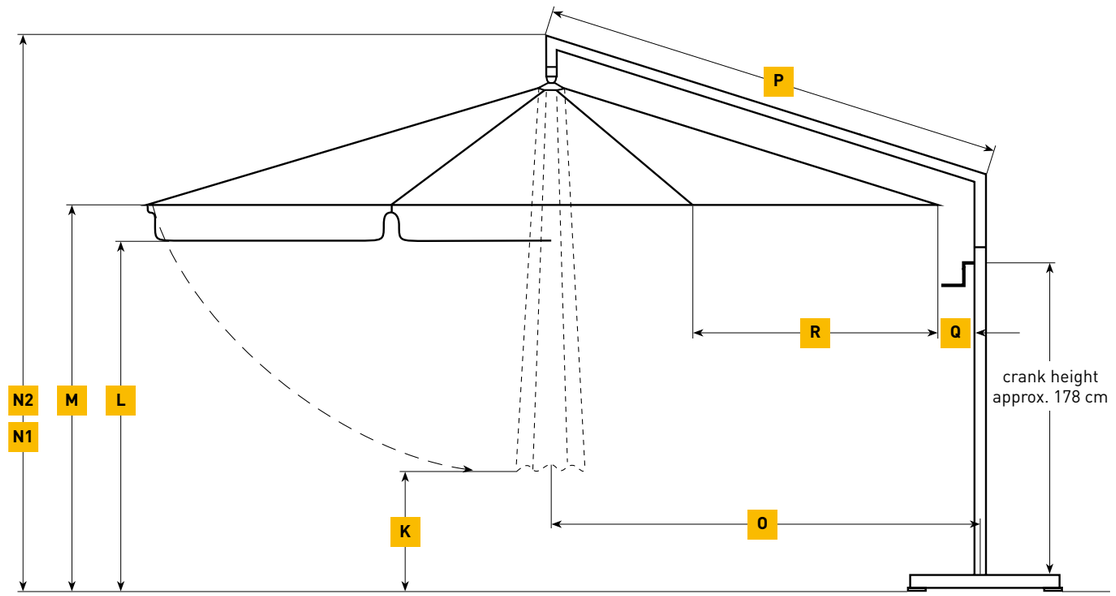


Intermediate and special sizes on request. All measurements are to be understood as approximate.

## RIALTO – Accessories and Bases

**Special frame paint finish**
Please state RAL number.

**Additional protective sleeve**
grey tarp material, with zipper. Please state parasol size.

art. no. **RA130**

RA130

## RIALTO – mobile installation options

**Full frame pedestal without slabs**
frame size 103 x 103 cm, total height 29 cm, height of frame x = 5 cm, weight approx. 27 kg, galvanized. For 2 sets of standard concrete slabs 50 x 50 x 5 cm.

art. no. **RZ111**

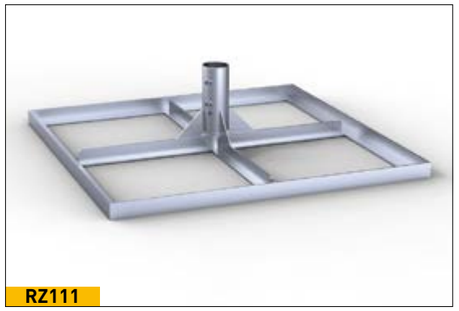
RZ111

**Full frame pedestal without slabs**,
with 8 rubber diagonal support levelling screws, frame size 103 x 103 cm, total height min. 32 cm, max. 36 cm, weight approx. 28 kg, galvanized. For 2 sets of standard concrete slabs 50 x 50 x 5 cm.

art. no. **RZ112**

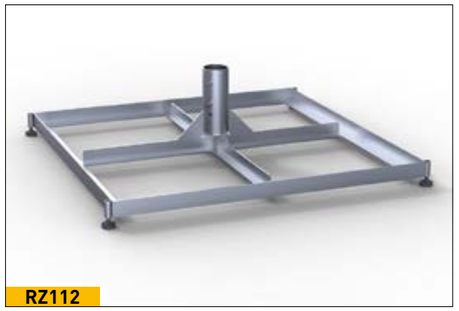
RZ112

**Full frame pedestal on wheels**
with rubber heavy-duty rollers and fixing brakes, frame size 103 x 103 cm, total height 36 cm, diameter of rollers 5 cm, weight approx. 28 kg, galvanized. For 2 sets of standard concrete slabs 50 x 50 x 5 cm.
Attention: wind sensitive!

art. no. **RZ114**

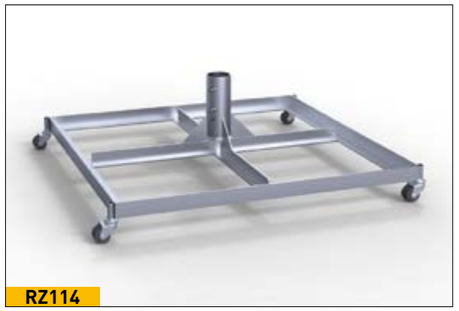
RZ114

**Concrete slabs**
1 set = 4 slabs, each 50 x 50 x 5 cm, weight per slab: approx. 28 kg, total weight approx. approx. 112 kg

art. no. **XZ50**

XZ50

## RIALTO – stationary installation options

**Anchor tube to be embedded in concrete**
2 pieces, screw-off upper part, for single and double-shade RIALTO, galvanized, weight approx. 9 kg, incl. top plate for winter protection.
a = 22 cm, b = 29 cm, x = Ø 17 cm, y = 16 cm.

art. no. **RZ118**

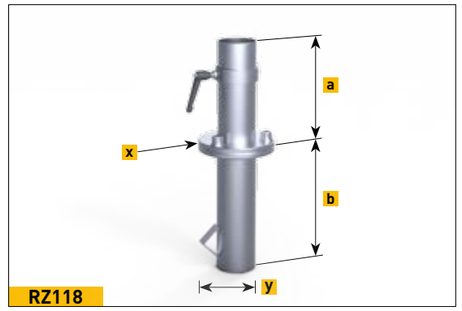

RZ118

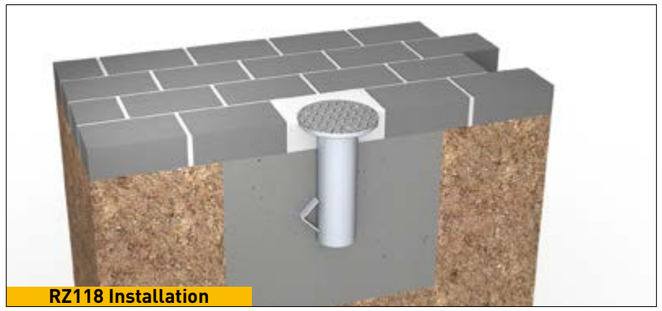
RZ118 Installation

RZ118 Installation

**Anchor foot to be embedded in concrete**
2 pieces, screw-off upper part, for triple-shade and quad-shade RIALTO, galvanized, weight approx. 17 kg, incl. top plate for winter protection
a = 23 cm, b = 32 cm, x = Ø 24 cm, y = 21 cm.

art. no. **RZ121**

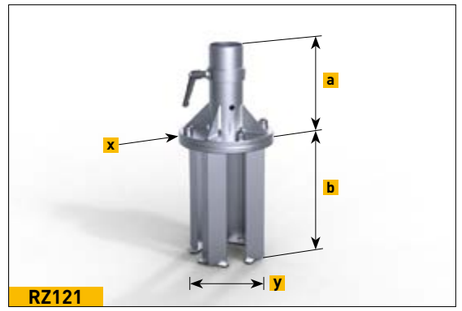

RZ121

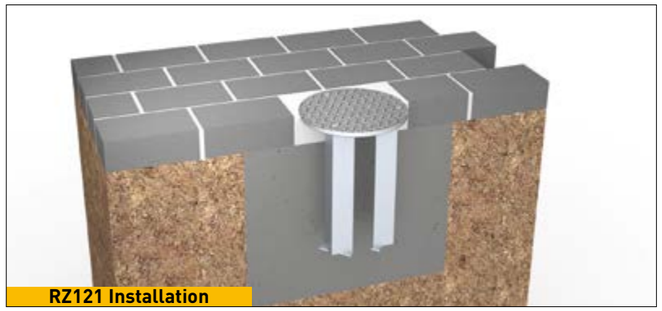
RZ121 Installation

RZ121 Installation

# RIALTO – stationary installation options

**Dowel-anchored plate**
galvanized, weight approx. 23 kg.
a = 25 cm, x = ☐ 50 cm, t = 1.2 cm, z = Ø 1.8 cm.

art. no. **RZ123**

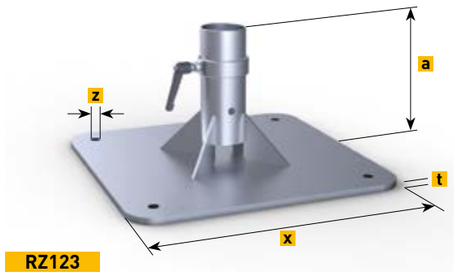

RZ123

RZ123 Installation

**Wall bracket**
galvanized, weight approx. 5.5 kg, wall plate 30 x 16 cm, x = 7 cm, t = 1 cm. Bottom of support pole rests on bottom end of anchor tube. When ordering, please state installation height, i.e. distance from ground surface to bottom end of support mast. Otherwise it may become necessary to shorten the mast.

Please note when mounting:

- Only use heavy-duty dowels
- only suitable for concrete walls or
- use through bolts.

art. no. **RZ125**

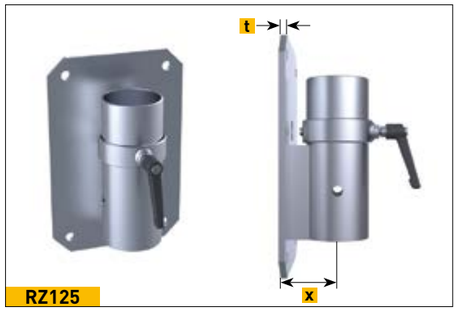

RZ125

**Wall mount for strain relief**
to complement wall bracket RZ125, to be mounted with heavy-duty dowels at chest height.

art. no. **RZ301**

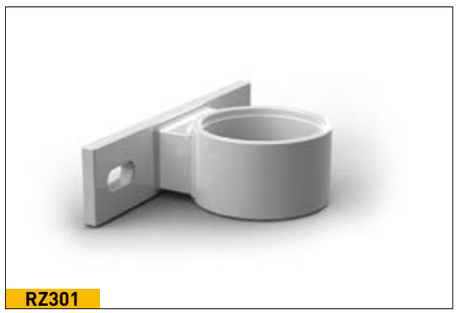
RZ301

# Your Personalized Centre-Post Parasol

For us, YOU, our customer, are the measure of all things. No matter how individual your needs, our customized product range is sure to meet your requirements. Simply compose your very own centre-post parasol from a variety of options. Choose from the following series:

**FILIUS**, **SCHATTELLO** and **ALBATROS.**
Each parasol type comes with a large range of additional equipment and accessories.

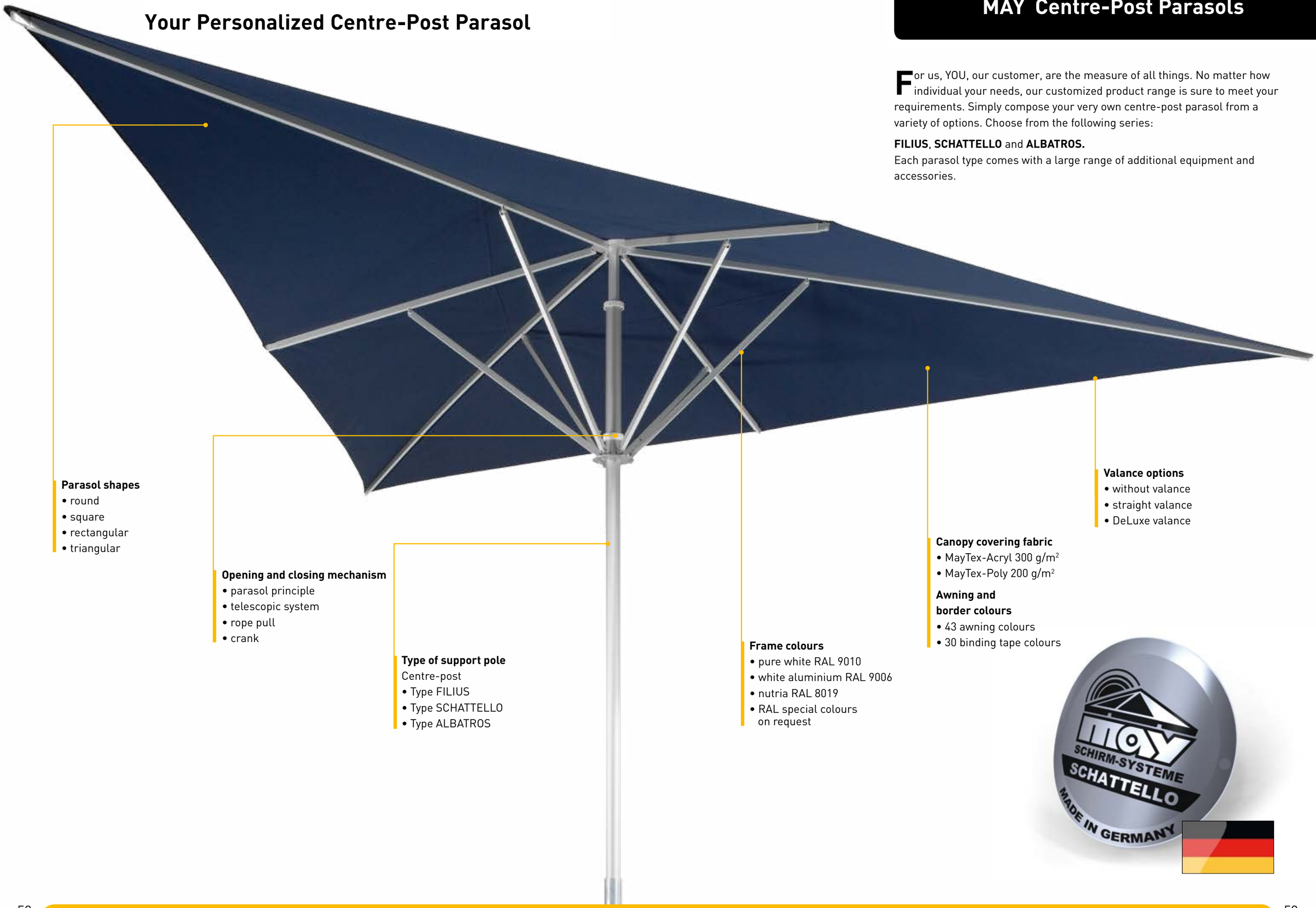

**Parasol shapes**
- round
- square
- rectangular
- triangular

**Opening and closing mechanism**
- parasol principle
- telescopic system
- rope pull
- crank

**Type of support pole**
Centre-post
- Type FILIUS
- Type SCHATTELLO
- Type ALBATROS

**Frame colours**
- pure white RAL 9010
- white aluminium RAL 9006
- nutria RAL 8019
- RAL special colours on request

**Valance options**
- without valance
- straight valance
- DeLuxe valance

**Canopy covering fabric**
- MayTex-Acryl 300 g/m²
- MayTex-Poly 200 g/m²

**Awning and border colours**
- 43 awning colours
- 30 binding tape colours

# FILIUS

The specific characteristic of FILIUS, the "Little Lightweight" among our range of parasols, is its lightness. It is precisely this feature that makes it extremely versatile and a fast-seller. Wherever FILIUS is put to use – for outdoor catering, in pedestrian zones, for market stands, for private, commercial or merely decorative purposes – it harmonizes well with its environment.

**Small sizes but top-quality workmanship**

- robust aluminium parasol
- easy handling
- with rope pull or crank drive
- frequent mounting and dismounting without problem

**MAY – shade systems**
**Made in Germany**

# FILIUS – Product Information

**Operating the parasol**
FILIUS is available in two different versions:
- with rope pull (FS)
- with crank drive (FK)

**High-quality framework materials**
The poles of our parasols are all made of high-quality alloyed, extruded aluminium profiles. Frame surfaces are powder-coated, highly impact-proof, and available in pure white RAL 9010, nutria RAL 8019, or white aluminium RAL 9006. Special colours available on request.
- support pole Ø 55 x 2.5 mm
- spoke dimensions
  30 x 15 x 2 mm/ 25 x 15 x 2 mm
- support strut dimensions
  25 x 15 x 2 mm

**Frame joints**
For us perfection in workmanship is an absolute must. Therefore, all moving axes are fitted with bolts and the canopy fabric is protected from damage. This extravagant technology ensures maximum stability and durability as well as easy execution of repairs.

**Top plate**
Elegant, graceful, highly practical.
Can be screwed off.
Colour to match frame.

**Canopy covering fabric**
Due to a special self-tensioning telescopic spring system the awning remains perfectly taut, even after years of usage. The canopy covering can easily and quickly be exchanged by means of a practical hooking system. For fabrics and awning colours see Page 134 onward.

**Valance options**
- without valance
- straight valance

**Parasol bonnet**
This optional, decorative textile bonnet for the top of the parasol canopy gives a feeling of airy, Mediterranean stylishness.

**When not in use**
The protective cover provided can easily be slipped over the shade during bad weather periods.

**Mounting**
- Pull parasol from cardboard sleeve.
- Remove all packaging material.
- Place parasol mast in holding tube.
  That's all – ready for use in a jiffy!

**Additional equipment**
- Side sheets
- Rain gutter

*Rope pull*

*Crank drive*

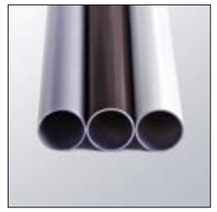
*Frame colours*

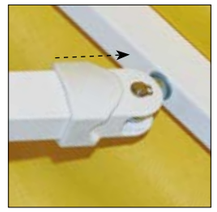
*Frame joints*

*Top plate*

*Top plate*

*Canopy covering*

*Without valance*

*Bonnet*

*Closing function*

# FILIUS – Sizes and Technical Data

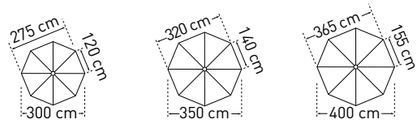


| | FILIUS | | Ø 3.0 m | Ø 3.5 m | Ø 4.0 m |
|---|---|---|---|---|---|
| | Segments | | 8 | 8 | 8 |
| | Area | m² | 7 | 9 | 12 |
| **A** | Height closed, with valance | cm | 279 | 287 | 295 |
| **B** | Height closed, without valance | cm | 259 | 267 | 295 |
| **C** | Headroom with valance | cm | 200 | 200 | 200 |
| **D** | Headroom without valance | cm | 202 | 202 | 222 |
| **E** | Height of valance | cm | 28 | 28 | 28 |
| **F** | Ground clearance (with valance) from spoke edge | cm | 113 | 97 | 79 |
| **G** | Ground clearance (without valance) from spoke edge | cm | 93 | 77 | 79 |
| **H** | Crank height | cm | 92 | 92 | 92 |
| | Weight without packaging | kg | 12 | 15.5 | 17.5 |
| | Support pole diameter | mm | outer-Ø 55, pole thickness 2.5 | | |
| | Packaging cardboard sleeve: length 307 cm | | Ø 25 cm, approx. 7.5 kg | | |
| | Installation base<br>length/width/min. depth | cm | 50 / 50 / 60 | | |
| | Minimum ballast<br>incl. full frame pedestal DMZ411 | | 1 layer of concrete slabs XZ40 = approx. 95 kg | | |

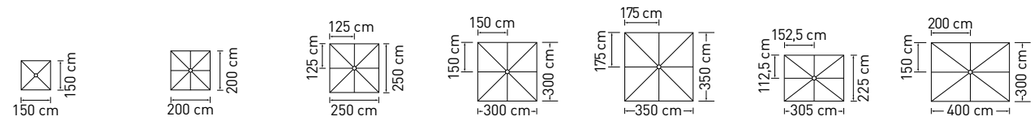


| | 1.5 x 1.5 m | 2 x 2 m | 2.5 x 2.5 m | 3 x 3 m | 3.5 x 3.5 m | 2.25 x 3.05 m | 3 x 4 m |
|---|---|---|---|---|---|---|---|
| | 4 | 8 | 8 | 8 | 8 | 8 | 8 |
| | 2.25 | 4 | 6.25 | 9 | 12 | 7 | 12 |
| **A** | 259 | 274 | 280 | 289 | 295 | 279 | 290 |
| **B** | 259 | 254 | 260 | 269 | 275 | 259 | 270 |
| **C** | 200 | 200 | 200 | 200 | 200 | 208 | 208 |
| **D** | 220 | 202 | 202 | 202 | 202 | 210 | 210 |
| **E** | 23 | 23 | 28 | 28 | 28 | 28 | 28 |
| **F** | 148 | 120 | 94 | 63 | 32 | 80 | 30 |
| **G** | 148 | 100 | 74 | 43 | 12 | 60 | 10 |
| **H** | 70 | 92 | 92 | 92 | 92 | 92 | 92 |
| | 15 | 15 | 18 | 15 | 16 | 15 | 16.5 |
| | outer-Ø 55, pole thickness 2.5 | | | | | | |
| | Ø 25 cm, approx. 7.5 kg | | | | | | |
| | 50/50/60 | | | | | | |
| | 1 layer of concrete slabs XZ40 = approx. 95 kg | | | | | | |

The heights specified are for parasols with MayTex-Acryl covering fabric that are mounted in an anchor tube (DMZ118, DMZ146, DMZ150). The increase in height for parasols with other installation bases can be seen in the list below:

| | | |
|---|---|---|
| Cross pedestal: | DMZ110 | + 6 cm |
| Full frame pedestal: | DMZ411 | + 9 cm |
| Full frame pedestal: | DMZ412 | + 12 cm |
| Full frame pedestal: | DMZ414 | + 16 cm |
| Full frame pedestal: | DMZ420 | + 19 cm |
| Granite base: | DMZ141 | + 10 cm |
| Wheeled pedestal | DMZ282 | + 14 / 15 cm |
| Anchor plate: | DMZ261 | + 4 cm |
| Base plate: | DMZ271 | + 3 cm |

*3D view of installation base with top plate for winter protection. Base must be frost-proof and enlarged if the ground is unstable.*

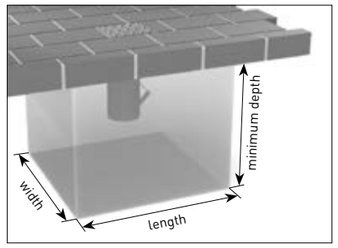


Intermediate and special sizes on request.
All measurements are to be understood as approximate.

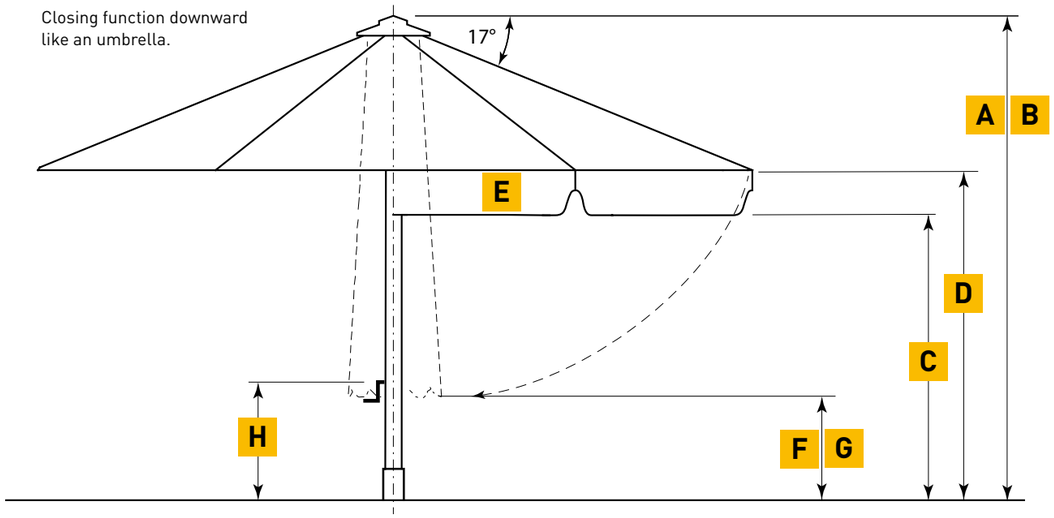

*FILIUS, FK 2.25 x 3.05 m*

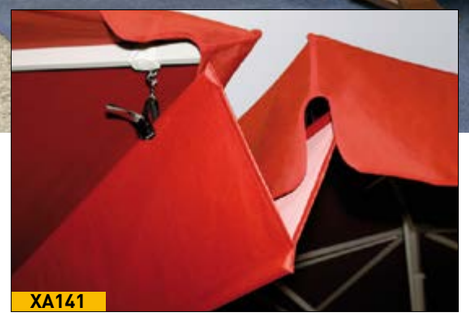

XA141

**Rain gutter**
grey tarp material, with aluminium rods for stabilization. Can only be used with "straight valance".

art. no. **XA141**

FA141 01

**Glass-fibre reinforced plastic holder for side sheets and rain gutter**
1 piece per spoke required

With 1 eyelet screw. art. no. **FA141 01**

With 2 eyelet screws. art. no. **FA141 02**

FA130

**Additional protective sleeve**
with integrated aluminium rod for easy handling and zipper, grey tarp material. Please state parasol size.

art. no. **FA130**

**Length extension of centre pole**
State required additional length in cm (max. 50 cm).

**Centre- pole shortening**
Length on request, dependent on parasol size.

**Special frame paint finish**
Please state colour of powder-coating in RAL.

**Canopy covering PVC-Era**
approx. 380g/m².

**Side sheets**
Textile in MayTex-Poly, cf. Page 132 onward.

*FILIUS, FK 3 x 3 m*

*FILIUS, FK Ø 3 m*

*FILIUS, FK 3.5 x 3.5 m*

## FILIUS – mobile installation options

**Cross pedestal**
mounted with screws, frame size 83 x 83 cm, total height 28 cm, galvanized, weight approx. 4.5 kg.
For standard concrete slabs 40 x 40 x 5 cm.

art. no. **DMZ110**

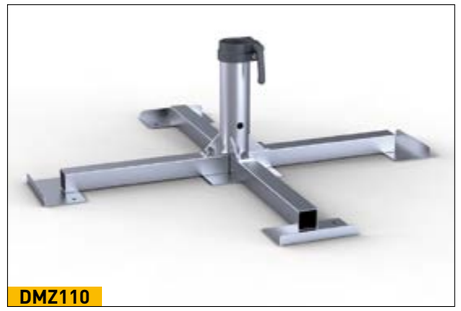


**Full frame pedestal**
frame size 84 x 91 cm, total height 33 cm, height of frame x = 5 cm, galvanized, weight approx. 23 kg.
For 1 set of standard concrete slabs 40 x 40 x 5 cm.

art. no. **DMZ411**

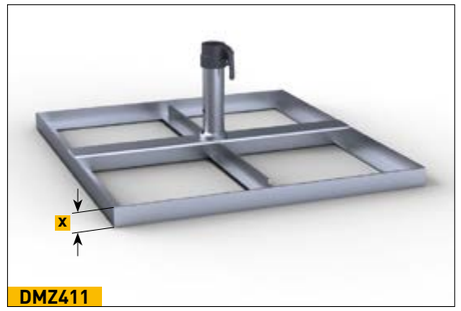


**Full frame pedestal, adjustable for slanting surfaces**
with 4 rubber diagonal support levelling screws, frame size 84 x 91 cm, total height min. 34 cm, max. 40 cm, galvanized, weight approx. 24 kg.
For 1 set of standard concrete slabs 40 x 40 x 5 cm.

art. no. **DMZ412**

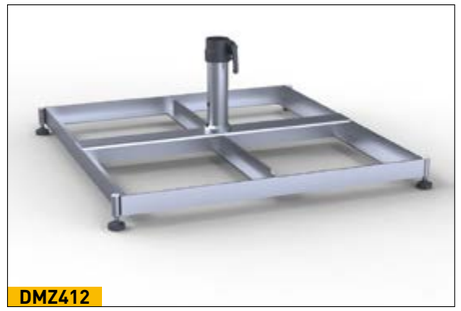


**Full frame pedestal on wheels**
with rubber heavy-duty rollers and fixing brakes, frame size 84 x 91 cm, total height 40 cm, diameter of rollers 5 cm, weight approx. 24 kg, galvanized.
For 1 set of standard concrete slabs 40 x 40 x 5 cm.
Attention: wind sensitive!

art. no. **DMZ414**

✱ **NEW!**
**Full frame pedestal on feet**
for forklift or lift truck transport, frame size 84 x 91 cm, foot height y = 10 cm, weight approx. 25 kg, galvanized.
For 1 set of standard concrete slabs 40 x 40 x 5 cm.

art. no. **DMZ420**

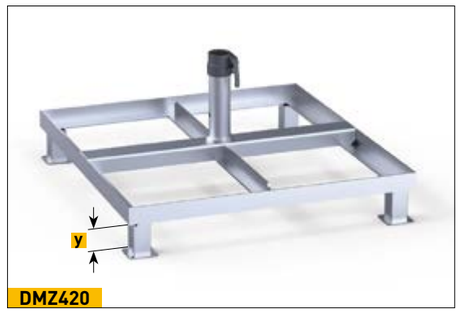




## FILIUS – mobile installation options

**Concrete slabs**
1 set = 4 slabs, each 40 x 40 x 5 cm, weight per slab: approx. 18 kg,
Total weight approx. 72 kg

art. no. **XZ40**

**Granite Base**
Ø approx. 70 cm, 2 pieces, round, grey, polished, 4 recessed grips, stainless steel surface, weight approx. 100 kg,
height x = approx. 10 cm

art. no. **DMZ141**

**Wheeled pedestal**
incl. weights, rubber rollers,
stainless steel locking rod. Colour anthracite,
75 x 75 cm, weight approx. 100 kg.

anthracite

art. no. **DMZ282**

**Wheeled pedestal**
incl. weights, rubber rollers,
stainless steel locking rod. Colour graphite,
75 x 75 cm, weight approx. 100 kg.

graphite

art. no. **DMZ283**

✱ **NEW!**
**Base plate**
plate size 80 x 80 cm, steel plate thickness x = 12 mm, galvanized, weight approx. 60 kg, high stability up to Beaufort 5.

art. no. **DMZ271**

## FILIUS – mobile installation options

**Full frame pedestal**
customized height to fit patio surface, frame size 83 x 83 cm, screw-off upper part, galvanized, weight approx. 23 kg, incl. top plate for winter protection. For 1 set of standard concrete slabs 40 x 40 x 5 cm.
Custom-made (not available on stock).

art. no. **DMZ208**

DMZ208

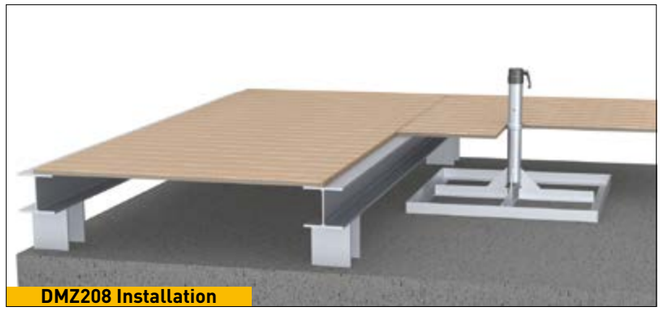
DMZ208 Installation

DMZ208 Installation

**Full frame pedestal with placement hinge**
customized height to fit patio surface, frame size 83 x 83 cm, screw-off upper part, galvanized, weight approx. 24 kg, incl. top plate for winter protection. For 1 set of standard concrete slabs 40 x 40 x 5 cm.
Custom-made (not available on stock)

art. no. **DMZ210**

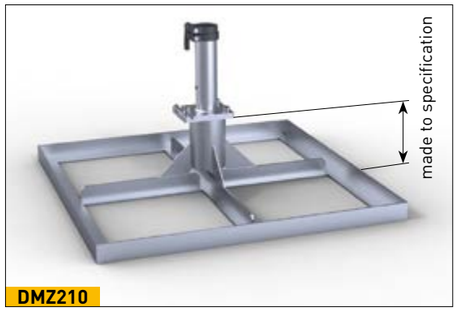

DMZ210

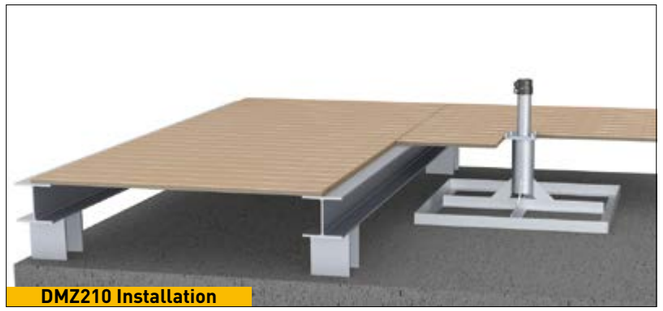
DMZ210 Installation

DMZ210 Installation

## FILIUS – stationary installation options

**Anchor tube to be embedded in concrete**
2 pieces, screw-off upper part, galvanized, weight approx. 4.7 kg, incl. top plate for winter protection.
a = 25 cm, b = 29 cm, x = Ø 8 cm, y = 15 cm

art. no. **DMZ118**

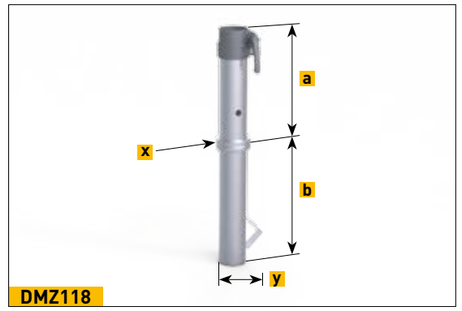

DMZ118

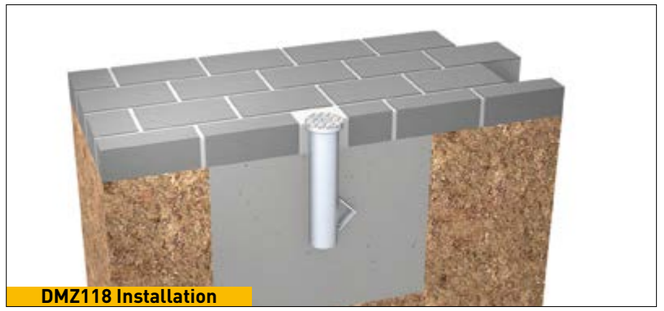
DMZ118 Installation

DMZ118 Installation

**Anchor tube to be embedded in concrete with placement hinge**
2 pieces, screw-off upper part, galvanized, weight approx. 5 kg, incl. top plate for winter protection, Bore for power cable through centre post.
Ø 5 cm, a = 26 cm, b = 28 cm, x = 12 cm, y = 14 cm, z = 14.5 cm

art. no. **DMZ150**

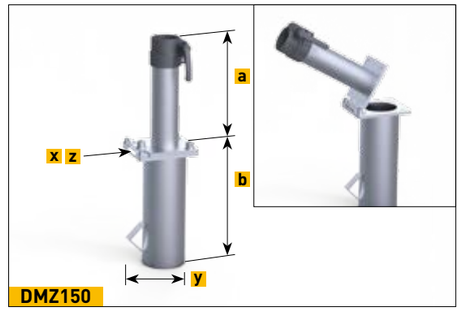

DMZ150

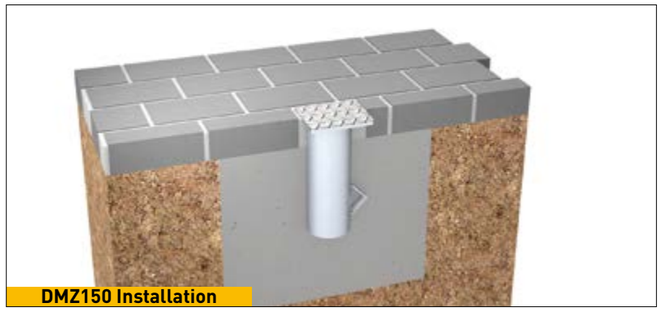
DMZ150 Installation

DMZ150 Installation

**Anchor tube to be embedded in concrete**
for an existing foundation with a bore hole of min. Ø 71 mm, 2 pieces, screw-off upper part, The bore hole is filled with concrete in order to fix the lower part of the anchor tube. The existing foundation must be adequate in size for the designated parasol, galvanized, weight approx. 3 kg, lower tube square, incl. top plate for winter protection.
a = 25 cm, b = 28.5 cm, x = Ø 8 cm, y = ☐5 cm

art. no. **DMZ146**

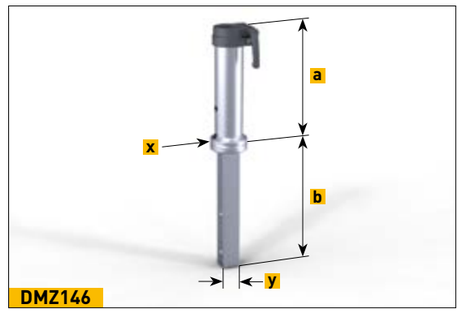

DMZ146

## FILIUS – stationary installation options

**Dowel-anchored plate**
galvanized, weight approx. 5 kg,
a = 27.5 cm, x = Ø 21.5 cm, t = 1.2 cm, z = Ø 1.65 cm.

art. no. **DMZ261**

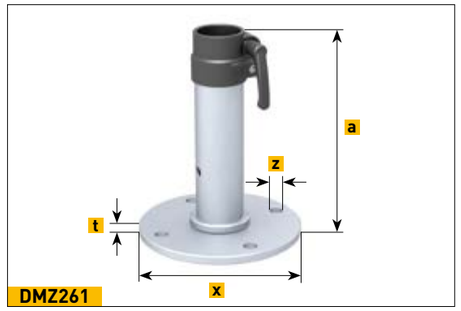

DMZ261

DMZ261 Installation

**Wall bracket**
galvanized, weight approx. 5.5 kg, wall plate 30 x 16 cm,
x = 20 cm, t = 0.8 cm. Bottom of support pole rests on bottom end of anchor tube.

art. no. **DMZ125**

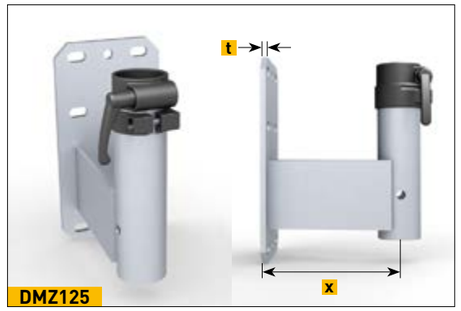

DMZ125

✱ **NEW!**
**Wall pressure plate for DMZ125**
galvanized; to be clamped onto the existing bars (only possible if these are very strong), bore holes for M12 stud bolts (not included in the delivery)

art. no. **200084**

200084

**Wall bracket**
galvanized, weight approx. 6.5 kg, wall plate 30 x 16 cm,
x = 20 cm, t = 0.8 cm.

art. no. **DMZ170**

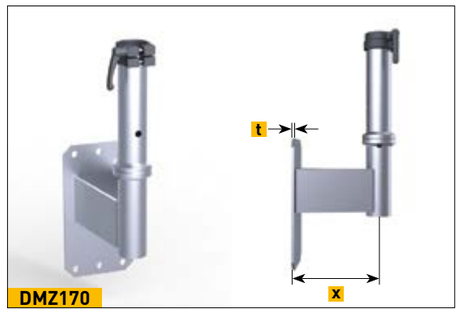

DMZ170

## FILIUS – stationary installation options

✱ **NEW!**
**Corner wall bracket**
galvanized, weight approx 5,5 kg,
x = 5.5 cm, t = 0.8 cm

art. no. **DMZ172**

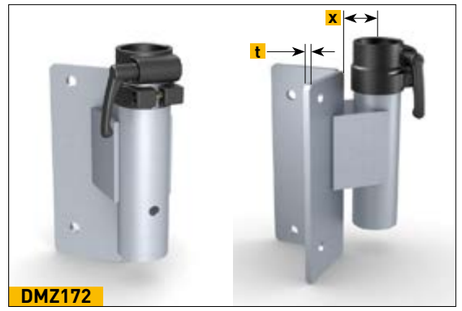

DMZ172

**Dowel-anchored plate**
customized height to fit patio surface, anchor plate 30 x 30 cm, screw-off upper part, galvanized, weight approx. 10 kg, incl. top plate for winter protection.
Custom-made (not available on stock).

art. no. **DMZ129**

DMZ129

DMZ129 Installation

DMZ129 Installation

**Dowel-anchored plate with placement hinge**
customized height to fit patio surface, anchor plate 30 x 30 cm, galvanized, weight approx. 13 kg, incl. top plate for winter protection.
Custom-made (not available on stock).

art. no. **DMZ127**

DMZ127

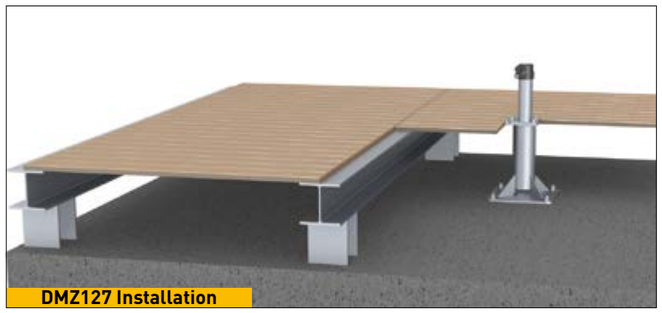
DMZ127 Installation

DMZ127 Installation

## FILIUS – stationary installation options

✱ **NEW!**

**Flat-roof dowel-anchored plate**

externally insulated roof system, system-conform flat roof connection with liquid plastic, customized height to fit flat roof surface, dowel plate 30 x 30 cm, screw-off upper part, galvanized, weight approx. 13 kg, incl. top plate for winter protection.
Custom-made (not available on stock).

art. no. **DMZ186**

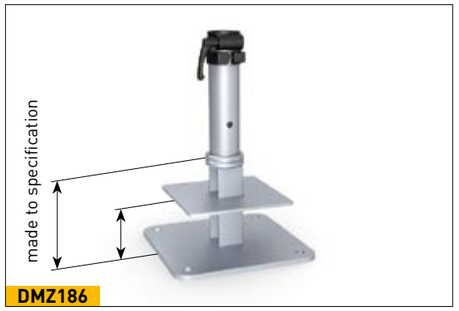

DMZ186

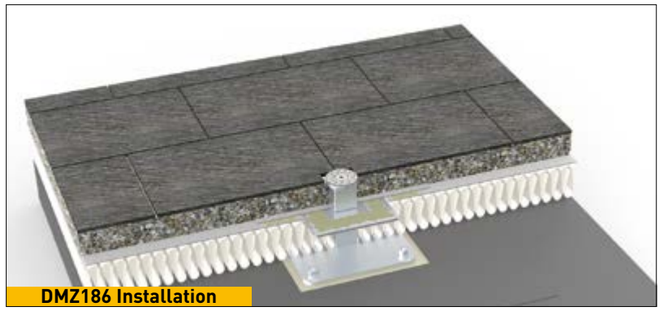
DMZ186 Installation

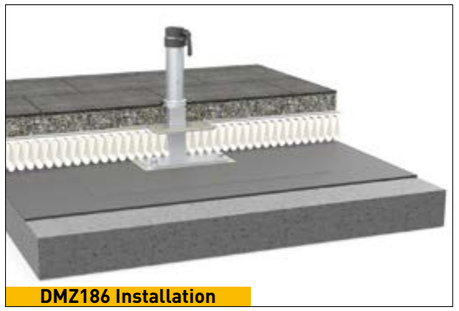
DMZ186 Installation

**Anchor bolt**

bolt and nut, fits for DMZ261, DMZ125, DMZ170, DMZ172, DMZ127, DMZ129 and DMZ186; approved for cracked and non-cracked concrete B25 to B55 (old compressive strength classes) C20/25 to C50/60 (new EU classification), also suitable for concrete B15 = C12/15 and natural stone with dense structure. Concrete bore hole Ø 16 x 115 mm. in stainless steel A4 1.4529, package contains 4 bolts, European Technical Approval ETA-05/0069.

art. no. **200900**

200900

**Screw-in ground anchor**

groundscrew with upper anchor tube, incl. standard parts, parts unscrewed on delivery,steel, galvanized acc. DIN EN ISO 1461, weight approx. 27 kg, delivered in two ready-to-assemble parts.
For further information cf. page 141.

art. no. **DMZ330**

DMZ330

## FILIUS – stationary installation options

✱ **NEW!**

**Base plate**

customized height to fit patio surface, to be screwed together on site, heaviest component approx. 60 kg, base plate size 80 x 80 cm, plate thickness x = 12 mm, screw-off upper part, galvanized, weight approx. 68 kg, incl. top plate for winter protection.
Custom-made (not available on stock).

art. no. **DMZ139**

DMZ139

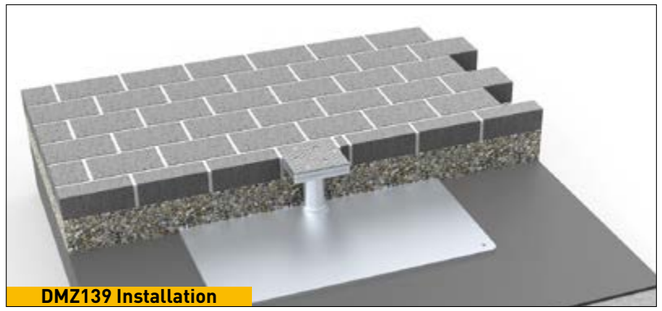
DMZ139 Installation

DMZ139 Installation

**Theft pin**

padlock and pin, in stainless steel, for support pole Ø 55 mm. suitable for retrofitting.

art. no. **200194**

200194

# SCHATTELLO

You would like to please your guests on a hot summer's day by offering them a welcoming seat outdoors in the cool shade? Or to charm them on a nippy day or a chill night by conjuring up a cosy atmosphere with dimmed lights and comfortable heating? Then our strong but graceful SCHATTELLO is what you are looking for. Its captivating elegance and ultra-easy handling ideally complement the hospitable ambience. SCHATTELLO – more than just a parasol!

**Our parasol for outdoor catering that stands as solid as a rock.**

- large-area all-weather protection
- easy handling
- extremely wind-resistant
- classic parasol for outdoor catering
- product video at www.may-online.com

Video

**MAY – shade systems**
**Made in Germany**

*Operating mechanism*

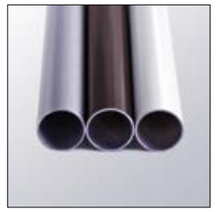

*Frame colours*

*Central rod system*

*Top plate*

*Frame joints*

*Canopy covering*

*Without valance*

*Straight valance*

*Closing function*

This extravagant techno logy ensures maximum stability and durability as well as easy execution of repairs.

# SCHATTELLO – Product Information

**Operating the parasol**
SCHATTELLO, our giant parasol, is opened and closed with a smooth-running, removable stainless steel crank or with the help of a cordless drill (hex drill fitting).

The reliable drive-system with accurate integrated bevel gears guarantees effortless handling, even after years of usage.

**High-quality framework materials**
The poles of our parasols are all made of high-quality alloyed, extruded aluminium profiles. Frame surfaces are powder-coated, highly impact-proof, and available in pure white RAL 9010, nutria RAL 8019, or white aluminium RAL 9006. Special colours available on request.
- support pole Ø 76 x 3 mm
- spoke dimensions 35 x 20 x 2 mm
- support strut dimensions 30 x 20 x 2 mm

**Robust central rod system**
The robust parasol central rod system consists of two discs with support struts and spokes. In order to prevent the spokes from twisting, the lower die-cast disc is firmly welded to the support pole.

**Frame joints**
For us perfection in workmanship is an absolute must. Therefore, all moving axes are fitted with easily removable bolts.

**Top plate**
Elegant and graceful. Can be screwed off. Colour to match framework.

**Wind tunnel tested**
We were able to prove the stability and sturdiness of our parasols during various tests in a wind tunnel. Even wind speeds of 50 km/h could not do any harm to a parasol of Ø 5 m. However, stability can only be guaranteed if the pedestal frame is adequately weighed down for the wind conditions of the intended location.

**Canopy covering fabric**
Due to a special self-tensioning telescopic spring system the awning remains perfectly taut, even after years of usage. The canopy covering can easily and quickly be exchanged by means of a practical hooking system. For fabrics and awning colours see Page 134 onward.

**Valance options**
- without valance
- straight valance
- Deluxe valance, cf. Page 140.

**Installation options**
- mobile
- stationary
  cf. Page 90 onward

**When not in use**
The protective cover provided can easily be slipped over the shade during bad weather periods.

**Mounting**
- Pull parasol out of cardboard sleeve.
- Remove all packaging material.
- Place parasol mast in holding tube, that's all – ready for use in a jiffy!

**Additional equipment**
- Side sheets
- Rain gutter
- Tubular motor, heaters, lighting and loud speakers cf. Page 84 and 122 onward

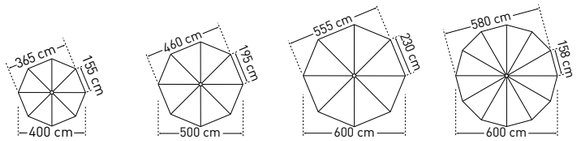


| | SCHATTELLO round | | Ø 4.0 m | Ø 5.0 m | Ø 6.0 m | Ø 6.0 m |
|---|---|---|---|---|---|---|
| | Segments | | 8 | 8 | 8 | 12 |
| | Area | m² | 12 | 19 | 27 | 28 |
| A | Height closed incl. top plate | cm | 410 | 425 | 440 | 450 |
| B | Height opened incl. top plate | cm | 303 | 318 | 333 | 343 |
| C | Headroom with valance | cm | 205 | 205 | 200 | 205 |
| D | Headroom without valance | cm | 227 | 227 | 222 | 237 |
| E | Height of valance | cm | 28 | 28 | 28 | 28 |
| F | Ground clearance from spoke edge | cm | 193 | 158 | 123 | 132 |
| G | Height of lower disc flange | cm | 183 | 198 | 213 | 223 |
| | Weight without packaging | kg | 27 | 38 | 45 | 52 |
| | Support pole diameter | mm | outer-Ø 76, pole thickness 3 | | | |
| | Packaging<br>cardboard sleeve: length 444 cm | | Ø 33 cm<br>approx. 17 kg | | | Ø 35 cm<br>approx.18 kg |
| | Installation base<br>length/width/min. depth | cm | 50 / 50 / 60 | | 60 / 60 / 60 | |
| | Minimum ballast<br>incl. full frame pedestal SZ411 | | 1 layer of concrete slabs<br>= approx. 120 kg | | 2 layers of concrete slabs<br>= approx. 240 kg | |

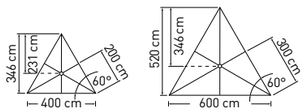


| | SCHATTELLO triangular | | 4 x 4 x 4 m | 6 x 6 x 6 m |
|---|---|---|---|---|
| | Segments | | 6 | 6 |
| | Area | m² | 6,9 | 15,6 |
| A | Height closed incl. top plate | cm | 391 | 402 |
| B | Height opened incl. top plate | cm | 284 | 295 |
| C | Headroom with valance | cm | 215 | 215 |
| D | Headroom without valance | cm | 237 | 237 |
| E | Height of valance | cm | 28 | 28 |
| F | Ground clearance from spoke edge | cm | 153 | 51 |
| G | Height of lower disc flange | cm | 234 | 183 |
| | Weight without packaging | kg | 27 | 40 |
| | Support pole diameter | mm | outer-Ø 76, pole thickness 3 | |
| | Packaging<br>cardboard sleeve: length 444 cm | | Ø 33 cm<br>approx. 17 kg | |
| | Installation base<br>length/width/min. depth | cm | 50 / 50 / 60 | |
| | Minimum ballast<br>incl. full frame pedestal SZ411 | | 1 layer of concrete slabs<br>= approx. 120 kg | |

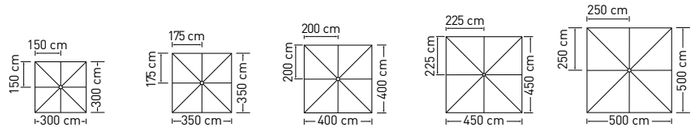


| | SCHATTELLO square | | 3.0 x 3.0 m | 3.5 x 3.5 m | 4.0 x 4.0 m | 4.5 x 4.5 m | 5.0 x 5.0 m |
|---|---|---|---|---|---|---|---|
| | Segments | | 8 | 8 | 8 | 8 | 8 |
| | Area | m² | 9 | 12,25 | 16 | 20,25 | 25 |
| A | Height closed incl. top plate | cm | 410 | 418 | 425 | 433 | 440 |
| B | Height opened incl. top plate | cm | 300 | 308 | 315 | 323 | 330 |
| C | Headroom with valance | cm | 215 | 215 | 215 | 215 | 215 |
| D | Headroom without valance | cm | 237 | 237 | 237 | 237 | 237 |
| E | Height of valance | cm | 28 | 28 | 28 | 28 | 28 |
| F | Ground clearance from spoke edge | cm | 180 | 154 | 119 | 96 | 62 |
| G | Height of lower disc flange | cm | 252 | 190 | 198 | 203 | 213 |
| | Weight without packaging | kg | 25 | 34 | 43 | 52 | 58 |
| | Support pole diameter | mm | outer-Ø 76, pole thickness 3 | | | | |
| | Packaging<br>cardboard sleeve: length 444 cm | | Ø 33 cm<br>approx. 17 kg | | | Ø 35 cm<br>approx. 18 kg | |
| | Installation base<br>length/width/min. depth | cm | 50 / 50 / 60 | | | | 60 / 60 / 60 |
| | Minimum ballast<br>incl. full frame pedestal SZ411 | | 1 layer of concrete slabs = approx. 120 kg | | | | 2 layers of concrete slabs<br>= approx. 240 kg |

The heights specified are for parasols with MayTex-Acryl covering fabric that are mounted in an anchor tube (SZ118, SZ146 SZ150). The increase in height for parasols with other installation bases can be seen in the list below:

| | | |
|---|---|---|
| Full frame pedestal: | SZ201 | + 14 cm |
| Full frame pedestal: | SZ203 | + 17 cm |
| Full frame pedestal: | SZ205 | + 21 cm |
| Full frame pedestal: | SZ411 | + 9 cm |
| Full frame pedestal: | SZ412 | + 12 cm |
| Full frame pedestal: | SZ414 | + 16 cm |
| Full frame pedestal: | SZ420 | + 19 cm |
| Anchor plate: | SZ131 | + 1,5 cm |
| Anchor plate: | SZ261 | + 5 cm |
| Base plate: | SZ272 | + 4 cm |
| Base plate: | SZ273 | + 4 cm |
| Base plate: | SZ274 | + 4 cm |
| Base plate: | SZ275 | + 4 cm |

*3D view of installation base with top plate for winter protection. Base must be frost-proof and enlarged if the ground is unstable.*

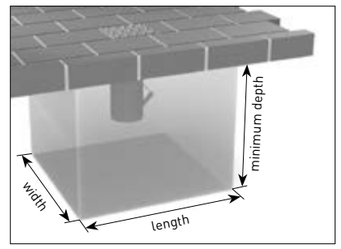


Intermediate and special sizes on request.
All measurements are to be understood as approximate.

* **NEW!**

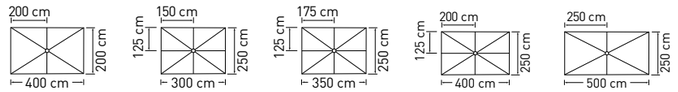


| | SCHATTELLO rectangular | | 2.0 x 4.0 m | 2.5 x 3.0 m | 2.5 x 3.5 m | 2.5 x 4.0 m | 2.5 x 5.0 m |
|---|---|---|---|---|---|---|---|
| | Segments | | 6 | 8 | 8 | 8 | 6 |
| | Area | m² | 8 | 7.5 | 8.8 | 10 | 12.5 |
| A | Height closed incl. top plate | cm | 387 | 399 | 397 | 393 | 397 |
| B | Height opened incl. top plate | cm | 280 | 301 | 298 | 294 | 298 |
| C | Headroom with valance | cm | 215 | 205 | 215 | 215 | 215 |
| D | Headroom without valance | cm | 237 | 237 | 237 | 237 | 237 |
| E | Height of valance | cm | 28 | 28 | 28 | 28 | 28 |
| F | Ground clearance from spoke edge | cm | 152 | 193 | 175 | 150 | 107 |
| G | Height of lower disc flange | cm | 237 | 246 | 243 | 240 | 243 |
| | Weight without packaging | kg | 28 | 28 | 30 | 31 | 32 |
| | Support pole diameter | mm | outer-Ø 76, pole thickness 3 | | | | |
| | Packaging<br>cardboard sleeve: length 444 cm | | Ø 33 cm<br>approx. 17 kg | | | | |
| | Installation base<br>length/width/min. depth | cm | 50 / 50 / 60 | | | | |
| | Minimum ballast<br>incl. full frame pedestal SZ411 | | 1 layer of concrete slabs = approx. 120 kg | | | | |

The heights specified are for parasols with MayTex-Acryl covering fabric that are mounted in an anchor tube (SZ118, SZ146 SZ150). The increase in height for parasols with other installation bases can be seen in the list below:

| | | |
|---|---|---|
| Full frame pedestal: | SZ201 | + 14 cm |
| Full frame pedestal: | SZ203 | + 17 cm |
| Full frame pedestal: | SZ205 | + 21 cm |
| Full frame pedestal: | SZ411 | + 9 cm |
| Full frame pedestal: | SZ412 | + 12 cm |
| Full frame pedestal: | SZ414 | + 16 cm |
| Full frame pedestal: | SZ420 | + 19 cm |
| Anchor plate: | SZ131 | + 1,5 cm |
| Anchor plate: | SZ261 | + 5 cm |
| Base plate: | SZ272 | + 4 cm |
| Base plate: | SZ273 | + 4 cm |
| Base plate: | SZ274 | + 4 cm |
| Base plate: | SZ275 | + 4 cm |

*3D view of installation base with top plate for winter protection. Base must be frost-proof and enlarged if the ground is unstable.*

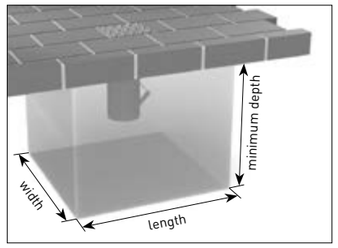


Intermediate and special sizes on request.
All measurements are to be understood as approximate.

* **NEW!**

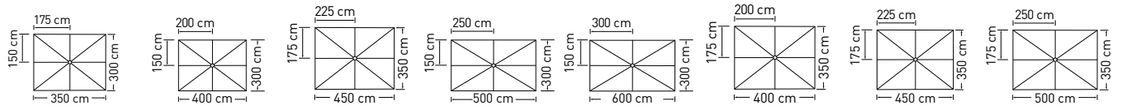


| | 3.0 x 3.5 m | 3.0 x 4.0 m | 3.0 x 4.5 m | 3.0 x 5.0 m | 3.0 x 6.0 m | 3.5 x 4.0 m | 3.5 x 4.5 m | 3.5 x 5.0 m |
|---|---|---|---|---|---|---|---|---|
| | 8 | 8 | 8 | 8 | 8 | 8 | 8 | 8 |
| | 10.5 | 12 | 13.5 | 15 | 18 | 14 | 15.8 | 17.5 |
| A | 402 | 397 | 405 | 397 | 405 | 410 | 415 | 420 |
| B | 305 | 298 | 298 | 290 | 298 | 303 | 308 | 313 |
| C | 205 | 215 | 215 | 215 | 215 | 215 | 215 | 215 |
| D | 237 | 237 | 237 | 237 | 237 | 237 | 237 | 237 |
| E | 28 | 28 | 28 | 28 | 28 | 28 | 28 | 28 |
| F | 160 | 135 | 124 | 97 | 63 | 135 | 117 | 105 |
| G | 250 | 245 | 203 | 245 | 190 | 187 | 230 | 230 |
| | 32 | 28 | 31 | 32 | 34 | 36 | 38 | 40 |
| | outer-Ø 76, pole thickness 3 | | | | | | | |
| | Ø 33 cm<br>approx. 17 kg | | | | | | | |
| | 50 / 50 / 60 | | | | | | | |
| | 1 layer of concrete slabs = approx. 120 kg | | | | | | | |

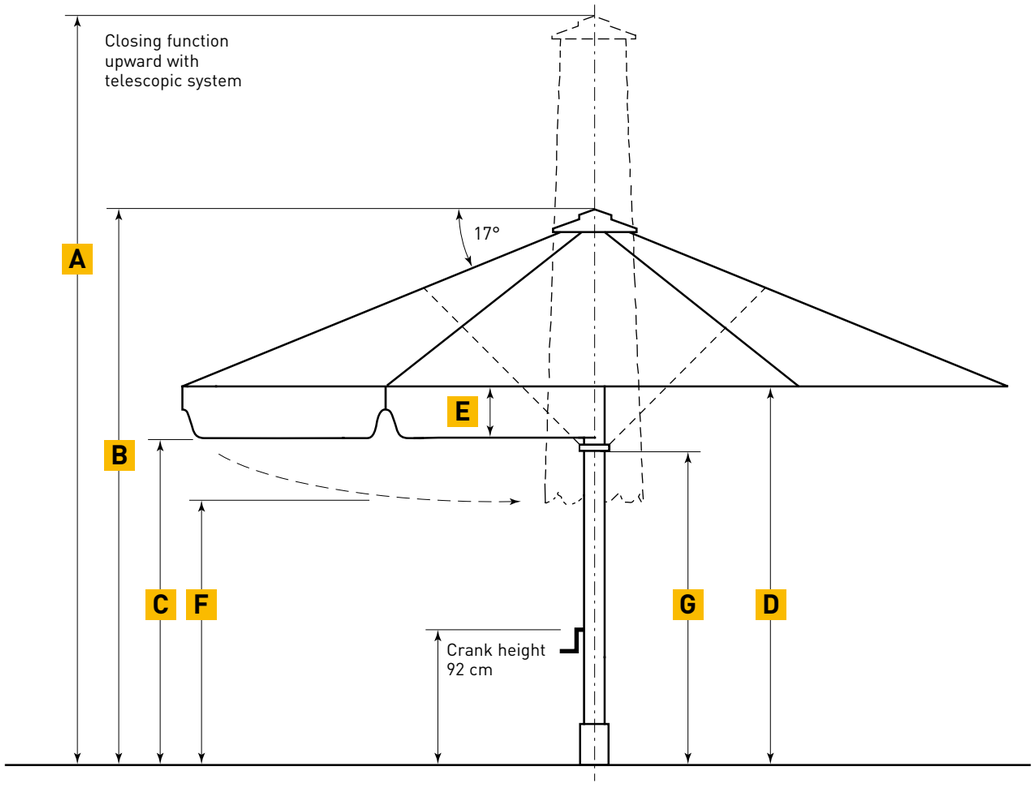

# SCHATTELLO – Sizes and Technical Data

* **NEW!**

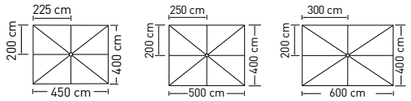


| | SCHATTELLO rectangular | | 4.0 x 4.5 m | 4.0 x 5.0 m | 4.0 x 6.0 m |
|---|---|---|---|---|---|
| | Segments | | 8 | 8 | 8 |
| | Area | m² | 18 | 20 | 24 |
| A | Height closed incl. top plate | cm | 416 | 420 | 425 |
| B | Height opened incl. top plate | cm | 293 | 313 | 318 |
| C | Headroom with valance | cm | 215 | 215 | 215 |
| D | Headroom without valance | cm | 237 | 237 | 237 |
| E | Height of valance | cm | 28 | 28 | 28 |
| F | Ground clearance from spoke edge | cm | 105 | 84 | 54 |
| G | Height of lower disc flange | cm | 225 | 198 | 203 |
| | Weight without packaging | kg | 44 | 36 | 40 |
| | Support pole diameter | mm | outer-Ø 76, pole thickness 3 | | |
| | Packaging<br>cardboard sleeve: length 444 cm | | Ø 33 cm<br>approx. 17 kg | | |
| | Installation base<br>length/width/min. depth | cm | 50 / 50 / 60 | | 60 / 60 / 60 |
| | Minimum ballast<br>incl. full frame pedestal SZ411 | | 1 layer of concrete slabs<br>= approx. 120 kg | | 2 layers of concrete slabs<br>= appr. 240 kg |

The heights specified are for parasols with MayTex-Acryl covering fabric that are mounted in an anchor tube (SZ118, SZ146 SZ150). The increase in height for parasols with other installation bases can be seen in the list below:

| | | |
|---|---|---|
| Full frame pedestal: | SZ201 | + 14 cm |
| Full frame pedestal: | SZ203 | + 17 cm |
| Full frame pedestal: | SZ205 | + 21 cm |
| Full frame pedestal: | SZ411 | + 9 cm |
| Full frame pedestal: | SZ412 | + 12 cm |
| Full frame pedestal: | SZ414 | + 16 cm |
| Full frame pedestal: | SZ420 | + 19 cm |
| Anchor plate: | SZ131 | + 1,5 cm |
| Anchor plate: | SZ261 | + 5 cm |
| Base plate: | SZ272 | + 4 cm |
| Base plate: | SZ273 | + 4 cm |
| Base plate: | SZ274 | + 4 cm |
| Base plate: | SZ275 | + 4 cm |

*3D view of installation base with top plate for winter protection. Base must be frost-proof and enlarged if the ground is unstable.*

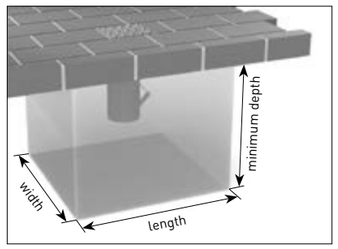


Intermediate and special sizes on request.
All measurements are to be understood as approximate.

*PUMAVision Headquarter, in Herzogenaurach*

SA130

**Additional protective sleeve**
without zipper, grey tarp material.
Please state parasol size.

art. no. **SA130**

SA132 / SA134

**Additional protective sleeve**
with telescopic system and zipper, length of telescope 4.5 m, grey tarp material. Essential for wind-exposed and coastal locations.
Please state parasol size.

art. no. **SA132**

**Protective sleeve for parasols with integrated heaters**
with telescopic system and zipper, length of telescope 4.5 m, grey tarp material. Please state parasol size.

art. no. **SA134**

* **NEW!**
Schattello aluminium frame system **with seawater-resistant stainless steel frame joints** V4A (1.4401, AISI 316)

art. no. **350118**

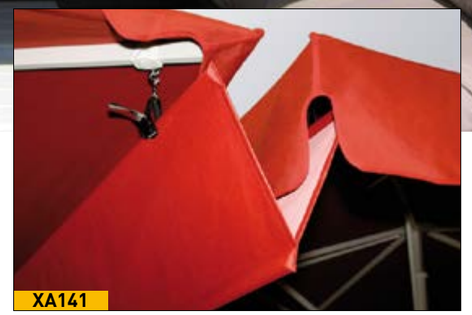

XA141

**Rain gutter**
in MayTex-Poly, with aluminium rods for stabilization. Can only be used with "straight valance".

art. no. **XA141**

SA141 01

**Glass-fibre reinforced plastic holder for side sheets and rain gutter**
1 piece per spoke required

With 1 eyelet screw. art. no. **SA141 01**

With 2 eyelet screws. art. no. **SA141 02**

**Holder for suspended rain gutter**
1 piece per spoke required.

art. no. **SA150**

**Length extension of centre pole**
State required additional length in cm (max. 50 cm).

**Centre- pole shortening**
Length on request, dependent on parasol size.

**Special frame paint finish**
Please state colour of powder-coating in RAL.

**Canopy covering PVC-Era**
approx. 380g/m².

**Side sheets**
Textile in MayTex-Poly, cf. Page 132 onward.

Side sheets

*Example of a playschool parasol*

**Special model: Playschool parasol Ø 5 m**
The colourful, multi-design canopy coverings consist of different, randomly selected segments. Thus each parasol is unique and offers fun and variety on any kids' playground.
Only available in size Ø 5 m, MayTex-Acryl, with valance.

Frame finish:
pure white RAL 9010 art. no. **SG5000 K001**
Frame finish:
white aluminium RAL 9006 art. no. **SG5000 K002**

**Impact protection for parasol mast**
Make sure that the children's playing area is safe! Without safety precautions, carefree romping around may lead to tears. This can be avoided with effective impact protection. If correctly mounted, our protective padding covers the anchor tube and the pole up to a height of 90 cm. Padding material available in grey, red and yellow.
art. no. **350268**

✱ **NEW!**
**Lubricant LubriMay 13**
for threaded spindle, content: 100 g.
art. no. **350652**

✱ **NEW!**
**CleanoMay 13**
This highly efficient cleaning concentrate removes grease, oil, coal,rust as well as other stubborn stains on your parasol canopy covering or frame. It can also serve to clean machines, kitchens (recognised as safe for foodstuffs by the Fresenius Institute ), barbeque grills, tarpaulins and plastics. Moreover, CleanoMay is non-toxic, biodegradable, inflammable and non-corroding.
1 litre concentrate yields 26 litres liquid cleanser.
art. no. **350848**

✱ **NEW!**
**Substitute canopy covering**
An occasional change of canopy covering can give your patio a completely new flair.

**T**ubular motor

- product video at www.may-online.com

Video

202116

202105

**Tubular motor**
Fully integrated in parasol mast, invisible; start-up via Plug and Play, open and close by pressing function key of radio transmitter for 3 seconds (for avoidance of unintentional switching), range of radio transmitter to parasol mast approx. 25 m; incl. hand crank for use in case of power cut, incl. plug connector of ground cable to motor cable as well as shrink tubing,the motors can only be used with anchor tubes SZ150, SZ131, SZ127, SZ210, SZ241 or SZ243. Compatible with LED-lighting, not compatible with heaters or loud-speakers; Power: 230 V~/50 Hz.

art. no. **202100**

202115

**Single-channel hand-held radio transmitter**
Single-channel device sufficient if only one parasol is to be controlled. Simultaneous control of one or any number of parasols possible. (2 signals)

art. no. **202105**

202105 + 202115

*** NEW!**
**Holder for radio transmitter**
suitable for single-channel hand-held radio transmitter 202105.
To be screwed to the wall.

art. no. **202115**

202106

**18-channel hand-held radio transmitter**
For the control of several parasols; can be used to control solitary as well as grouped parasols, programming possible in our company after prior date arrangement. 18-channel device. For separate control of up to 18 parasols (36 signals).

art. no. **202106**

*** NEW!**
**Holder for radio transmitter**
suitable for 18-channel hand-held radio transmitter 202106.
To be screwed to the wall.

art. no. **202116**

202106 + 202116

*** NEW!**
**Wall-mounted radio transmitter**
Radio transmitter for permanent screw-on installation. The transmitter must have direct visual contact with the radio receiver. Sufficient for the control of one parasol. Simultaneous control of one or any number of parasols possible (2 signals).

art. no. **202104**

202104

*** NEW!**
**BUS transmitting station**
Direct visual contact with the radio receiver necessary.
Suitable for the separate control of 2 parasols (4 signals).

art. no. **202108**

202108

**Wind sensor**
Only to be used as a supportive measure. In case of rising wind, the operator of the business must see that the parasols are closed and secured with a strap. The wind sensor measures the speed of the wind and passes on a signal to the tubular motor, which then automatically closes the parasols. The wind threshold value can be programmed with an adjustable potentiometer. Solar-cell and radio transmission, no cabling needed. To be fastened in a suitable position with the two dowels supplied in the package. The location should be as exposed as possible and in the vicinity of the parasols. Direct visual contact with the radio receiver necessary.

art. no. **202110**

202110

Below you will find a list of our range of all-in kits on offer.

Choose a parasol and one of the kits listed. From page 122 onwards you will find more information on the individual kit components. The kits can, however, only be applied in combination with installation option SZ127, SZ131, SZ150, SZ186, SZ210, SZ241 or SZ243.

## Slim lights

### Kit S 2 art. no. 350940

| 230 V connection. Kit consists of: | quantity | art. no. |
|---|---|---|
| W-MAY plug connector | 1 | 350930 |
| Power supply within centre pole | 1 | 200369 |
| **Slim light 13 W** | 2 | 202090 |

### Kit S 4 art. no. 350941

| 230 V connection. Kit consists of: | quantity | art. no. |
|---|---|---|
| W-MAY plug connector | 1 | 350930 |
| Power supply within centre pole | 1 | 200369 |
| **Slim light 13 W** | 4 | 202090 |

### Kit S 6 art. no. 350942

| 230 V connection. Kit consists of: | quantity | art. no. |
|---|---|---|
| W-MAY plug connector | 1 | 350930 |
| Power supply within centre pole | 1 | 200369 |
| **Slim light 13 W** | 6 | 202090 |

## LED lighting

### Kit S 2LED art. no. 350943

| 230 V connection. Kit consists of: | quantity | art. no. |
|---|---|---|
| W-MAY plug connector | 1 | 350930 |
| Power supply within centre pole | 1 | 200369 |
| Power supply unit (PSU) for max. 4 LED bars, integrated in parasol | 1 | 350270 |
| **LED bar, warm white** | 2 | 350274 |

### Kit S 4LED art. no. 350944

| 230 V connection. Kit consists of: | quantity | art. no. |
|---|---|---|
| W-MAY plug connector | 1 | 350930 |
| Power supply within centre pole | 1 | 200369 |
| Power supply unit (PSU) for max. 4 LED bars, integrated in parasol | 1 | 350270 |
| **LED bar, warm white** | 4 | 350274 |

### Kit S 6LED art. no. 350945

| 12 V connection. Kit consists of: | quantity | art. no. |
|---|---|---|
| W-MAY plug connector | 1 | 350930 |
| Power supply within centre pole | 1 | 200369 |
| Power supply unit (PSU) for max. 20 LED bars, installed on the outdoor wall or inside the house | 1 | 350271 |
| **LED bar, warm white** | 6 | 350274 |

## Infrared heaters + slim lights

In standard cases these kits are firmly connected with the underground cable. Alternatively, plug connector S1, art. no. 350107 can be used.

### Kit S 4 2A art. no. 202062

| 400 V connection. Kit consists of: | quantity | art. no. |
|---|---|---|
| Power supply within centre pole | 1 | 200369 |
| Electrical harness | 1 | 200565 |
| Automatic auxiliary cut out switch | 1 | 202051 |
| Cabling, long (only possible along diagonal spokes) | 2 | 200579 |
| Swivelling holder | 2 | 202040 |
| **Infrared heater** | 2 | 200408 |
| **Slim light 13 W** | 4 | 202090 |

For parasol sizes Ø 4 m, Ø 5 m, 2 x 2 m, 2.5 x 2.5 m, 3.5 x 3.5 m, 2 x 4 m, 2.5 x 3.0 m, 2.5 x 3.5 m, 4 x 4 x 4 m and 6 x 6 x 6 m with valance, please opt for Kit S4 2Z.

### Kit S 4 4A art. no. 202064

| 400 V connection. Kit consists of: | quantity | art. no. |
|---|---|---|
| Power supply within centre pole | 1 | 200369 |
| Electrical harness | 1 | 200565 |
| Automatic auxiliary cut out switch | 1 | 202051 |
| Cabling, long (only possible along diagonal spokes) | 4 | 200579 |
| Swivelling holder | 4 | 202040 |
| **Infrared heater** | 4 | 200408 |
| **Slim light 13 W** | 4 | 202090 |

For parasol sizes Ø 4 m, Ø 5 m, 2 x 2 m, 2.5 x 2.5 m, 3.5 x 3.5 m, 2 x 4 m, 2.5 x 3.0, m 2.5 x 3.5 m, 4 x 4 x 4 m and 6 x 6 x 6 m with valance, please opt for Kit S4 4Z.

### Kit S 4 2Z art. no. 207062

| 400 V connection. Kit consists of: | quantity | art. no. |
|---|---|---|
| Power supply within centre pole | 1 | 200369 |
| Electrical harness | 1 | 200565 |
| Automatic auxiliary cut out switch | 1 | 202051 |
| Cabling, short (Please state position intended) | 2 | 200585 |
| Swift-hold spar | 2 | 200578 |
| **Infrared heater** | 2 | 200408 |
| **Slim light 13 W** | 4 | 202090 |

This kit cannot be used for parasol size 4 x 5 m.

### Kit S 4 4Z art. no. 207064

| 400 V connection. Kit consists of: | quantity | art. no. |
|---|---|---|
| Power supply within centre pole | 1 | 200369 |
| Electrical harness | 1 | 200565 |
| Automatic auxiliary cut out switch | 1 | 202051 |
| Cabling, short (Please state position intended) | 4 | 200585 |
| Swift-hold spar | 4 | 200578 |
| **Infrared heater** | 4 | 200408 |
| **Slim light 13 W** | 4 | 202090 |

This kit cannot be used for parasol sizess 2 x 2 m, 2.5 x 2.5 m, 3 x 3 m and 4 x 5 m.
We will be pleased to advise you about alternatives.

# Infrared heaters + LED lighting

In standard cases these kits are firmly connected with the underground cable. Alternatively, plug connector S1, art. no. 350107 can be used.

## Kit S 4LED 2A art. no. 350953

| 400 V connection. Kit consists of: | quantity | art. no. |
|---|---|---|
| Power supply within centre pole | 1 | 200369 |
| Electrical harness | 1 | 200565 |
| Automatic auxiliary cut out switch | 1 | 202051 |
| Cabling, long (only possible along diagonal spokes) | 2 | 200579 |
| Swivelling holder | 2 | 202040 |
| **Infrared heater** | 2 | 200408 |
| Power supply unit (PSU) for max. 4 LED bars, integrated in parasol | 1 | 350270 |
| **LED bar, warm white** | 4 | 350274 |

For parasol sizes Ø 4 m, Ø 5 m, 2 x 2 m, 2.5 x 2.5 m, 3.5 x 3.5 m, 2 x 4 m, 2.5 x 3.0 m, 2.5 x 3.5 m, 4 x 4 x 4 m and 6 x 6 x 6 m with valance, please opt for Kit S4 LED 2Z.

## Kit S 4LED 4A art. no. 350954

| 400 V connection. Kit consists of: | quantity | art. no. |
|---|---|---|
| Power supply within centre pole | 1 | 200369 |
| Electrical harness | 1 | 200565 |
| Automatic auxiliary cut out switch | 1 | 202051 |
| Cabling, long (only possible along diagonal spokes) | 4 | 200579 |
| Swivelling holder | 4 | 202040 |
| **Infrared heater** | 4 | 200408 |
| Power supply unit (PSU) for max. 4 LED bars, integrated in parasol | 1 | 350270 |
| **LED bar, warm white** | 4 | 350274 |

For parasol sizes Ø 4 m, Ø 5 m, 2 x 2 m, 2.5 x 2.5 m, 3.5 x 3.5 m, 2 x 4 m, 2.5 x 3.0 m, 2.5 x 3.5 m, 4 x 4 x 4 m and 6 x 6 x 6 m with valance, please opt for Kit S4 LED 4Z.

## Kit S 4LED 2Z art. no. 350955

| 400 V connection. Kit consists of: | quantity | art. no. |
|---|---|---|
| Power supply within centre pole | 1 | 200369 |
| Electrical harness | 1 | 200565 |
| Automatic auxiliary cut out switch | 1 | 202051 |
| Cabling, short (Please state position intended) | 2 | 200585 |
| Swift-hold spar | 2 | 200578 |
| **Infrared heater** | 2 | 200408 |
| Power supply unit (PSU) for max. 4 LED bars, integrated in parasol | 1 | 350270 |
| **LED bar, warm white** | 4 | 350274 |

This kit cannot be used for parasol size 4 x 5 m.

# LED lighting + tubular motor

Please order radio transmitter separately.

## Kit S 4LED 4Z art. no. 350956

| 400 V connection. Kit consists of: | quantity | art. no. |
|---|---|---|
| Power supply within centre pole | 1 | 200369 |
| Electrical harness | 1 | 200565 |
| Automatic auxiliary cut out switch | 1 | 202051 |
| Cabling, short (Please state position intended) | 4 | 200585 |
| Swift-hold spar | 4 | 200578 |
| **Infrared heater** | 4 | 200408 |
| Power supply unit (PSU) for max. 4 LED bars, integrated in parasol | 1 | 350270 |
| **LED bar, warm white** | 4 | 350274 |

This kit cannot be used for parasol size 4 x 5 m.

## Kit S 2LED M art. no. 350946

| 12 V + 230 V connection. Kit consists of: | quantity | art. no. |
|---|---|---|
| W-MAY plug connector | 1 | 350930 |
| H1-MAY plug connector | 1 | 350931 |
| Power supply within centre pole | 1 | 200369 |
| Electrical harness | 1 | 350933 |
| Power supply unit (PSU) for max. 4 LED bars, installed on the outdoor wall or inside the house | 1 | 350270 |
| **LED bar, warm white** | 2 | 350274 |
| **Tubular motor** | 1 | 202100 |

## Kit S 4LED M art. no. 350947

| 12 V + 230 V connection. Kit consists of: | quantity | art. no. |
|---|---|---|
| W-MAY plug connector | 1 | 350930 |
| H1-MAY plug connector | 1 | 350931 |
| Power supply within centre pole | 1 | 200369 |
| Electrical harness | 1 | 350933 |
| Power supply unit (PSU) for max. 4 LED bars, installed on the outdoor wall or inside the house | 1 | 350270 |
| **LED bar, warm white** | 4 | 350274 |
| **Tubular motor** | 1 | 202100 |

## Kit S 6LED M art. no. 350948

| 12 V + 230 V connection. Kit consists of: | quantity | art. no. |
|---|---|---|
| W-MAY plug connector | 1 | 350930 |
| H1-MAY plug connector | 1 | 350931 |
| Power supply within centre pole | 1 | 200369 |
| Electrical harness | | 350933 |
| Power supply unit (PSU) for max. 20 LED bars, installed on the outdoor wall or inside the house | 1 | 350271 |
| **LED bar, warm white** | 6 | 350274 |
| **Tubular motor** | 1 | 202100 |

## SCHATTELLO – mobile installation options

**Full frame pedestals for 1 set of concrete slabs**

**Full frame pedestal**
frame size 103 x 111 cm, total height 29 cm, height of frame x = 5 cm, galvanized, weight approx. 30 kg. For 1 set of standard concrete slabs 50 x 50 x 5 cm.

art. no. **SZ411**

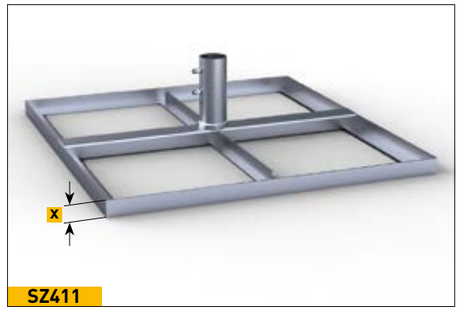


**Full frame pedestal with 4 rubber diagonal support levelling screws**
frame size 103 x 111 cm, total height min. 32 cm, max. 36 cm, galvanized, weight approx. 30 kg. For 1 set of standard concrete slabs 50 x 50 x 5 cm.

art. no. **SZ412**

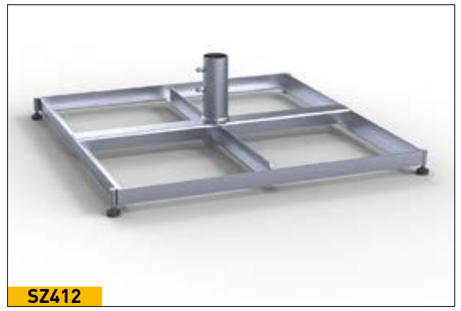


**Full frame pedestal on wheels**
with rubber heavy-duty rollers and fixing brakes, frame size 103 x 111 cm, total height 36 cm, diameter of rollers 5 cm, galvanized, weight approx. 31 kg. For 1 set of standard concrete slabs 50 x 50 x 5 cm. Attention: wind sensitive!

art. no. **SZ414**

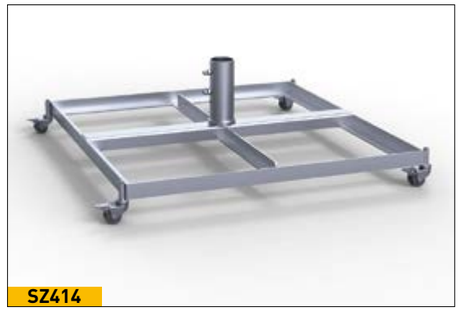


✱ **NEW!**
**Full frame pedestal on feet**
for forklift or lift truck transport, frame size 103 x 111 cm, foot height y = 10 cm, galvanized, weight approx 30 kg. For 1 set of standard concrete slabs 50 x 50 x 5 cm.

art. no. **SZ420**

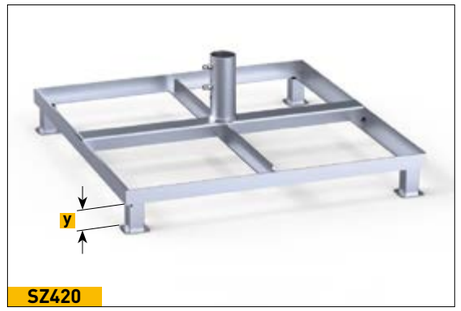


## SCHATTELLO – mobile installation options

**Full frame pedestals for 2 sets of concrete slabs**

**Full frame pedestal**
frame size 103 x 103 cm, total height 34 cm, height of frame x = 5 cm, galvanized, weight approx. 28 kg. For 2 sets of standard concrete slabs 50 x 50 x 5 cm.

art. no. **SZ201**

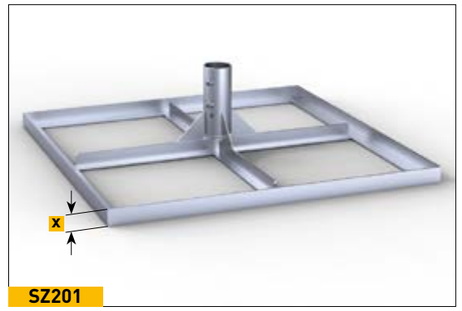


**Full frame pedestal**
with rubber diagonal support levelling screws,
frame size 103 x 103 cm,total height min. 37 cm, max. 41 cm, galvanized, weight approx. 29 kg. For 2 sets of standard concrete slabs 50 x 50 x 5 cm.

art. no. **SZ203**

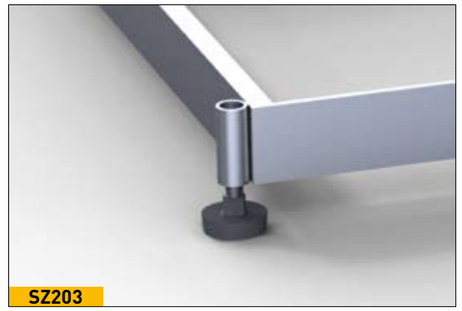


**Full frame pedestal on wheels**
with rubber heavy-duty rollers and fixing brakes, frame size 103 x 103 cm, total height 41 cm, diameter of rollers 5 cm, galvanized, weight approx.  29 kg. For 2 sets of standard concrete slabs 50 x 50 x 5 cm. Attention: wind sensitive!

art. no. **SZ205**

## SCHATTELLO – mobile installation options

**Full frame pedestal**
customized height to fit patio surface, frame size 103 x 103 cm, screw-off upper part, galvanized, weight approx. 29 kg, incl. top plate for winter protection. For 1 set of standard concrete slabs 50 x 50 x 5 cm.
Custom-made (not available on stock).

art. no. **SZ208**

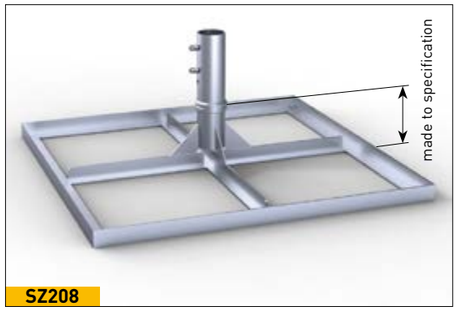

SZ208

SZ208 Installation

SZ208 Installation

**Full frame pedestal with placement hinge**
customized height to fit patio surface, frame size 103 x 103 cm, screw-off upper part, galvanized, weight approx. 32 kg, incl. top plate for winter protection. For 1 set of standard concrete slabs 50 x 50 x 5 cm.
Custom-made (not available on stock).

art. no. **SZ210**

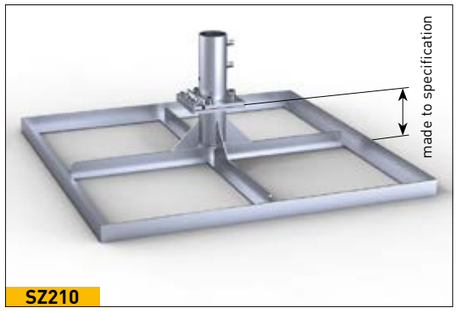

SZ210

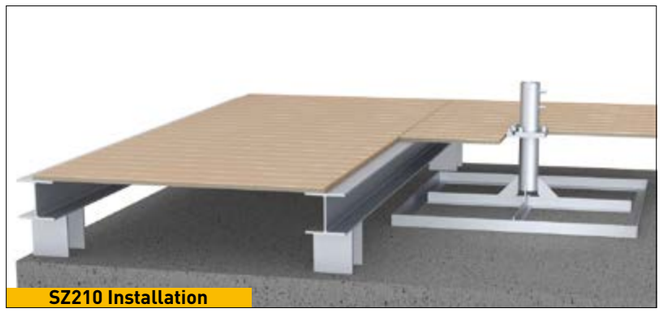
SZ210 Installation

SZ210 Installation

**Concrete slabs**
1 set = 4 slabs, each 50 x 50 x 5 cm, weight per slab: approx. 28 kg, total weight approx. 112 kg.

art. no. **XZ50**

XZ50



## SCHATTELLO – mobile installation options

✱ **NEW!**
**Base plate**
for parasols up to 21 m² in size, to be screwed together on site, heaviest component approx. 50 kg, base plate size 145 x 145 cm, steel plate thickness x = 12 mm, galvanized, weight approx. 213 kg.

art. no. **SZ272**

✱ **NEW!**
**Base plate**
for parasols from 21 m² in size, to be screwed together on site, heaviest component approx. 63 kg, base plate size 145 x 145 cm, steel plate thickness x = 15 mm, galvanized, weight approx. 263 kg.

art. no. **SZ274**

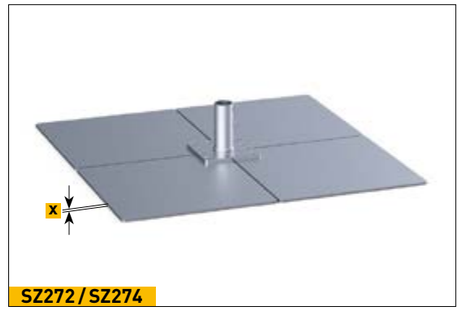

SZ272 / SZ274

✱ **NEW!**
**Base plate with placement hinge**
for parasols up to 21 m² in size, to be screwed together on site, heaviest component approx. 50 kg, base plate size 145 x 145 cm, steel plate thickness x = 12 mm, galvanized, weight approx. 214 kg.

art. no. **SZ273**

✱ **NEW!**
**Base plate with placement hinge**
for parasols from 21 m² in size, to be screwed together on site, heaviest component approx. 63 kg, base plate size 145 x 145 cm, steel plate thickness x = 15 mm, galvanized, weight approx. 264 kg.

art. no. **SZ275**

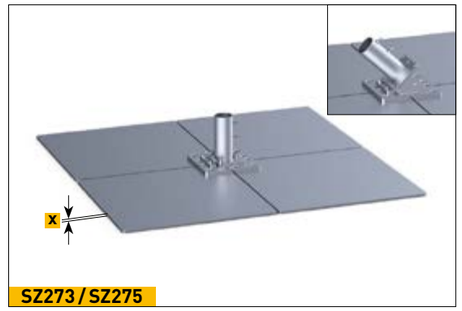

SZ273 / SZ275

## SCHATTELLO – stationary installation options

**Anchor tube to be embedded in concrete**
2 pieces, screw-off upper part, for 8-segment shade, galvanized, (also available in stainless steel), weight approx. 7 kg, incl. top plate for winter protection.
a = 22 cm, b = 29 cm, x = Ø 10 cm, y = 16 cm.

art. no. **SZ118**

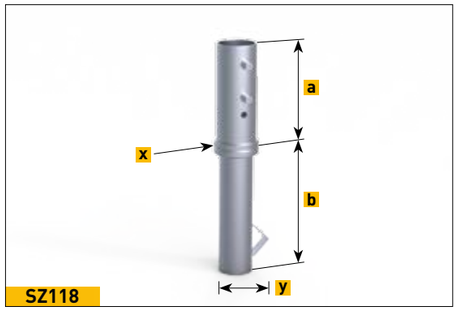

SZ118

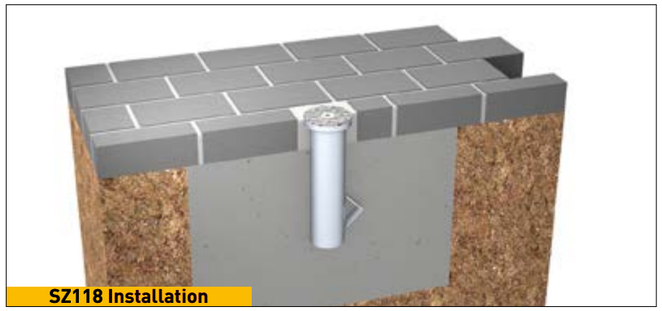
SZ118 Installation

SZ118 Installation

**Anchor tube to be embedded in concrete with placement hinge**
2 pieces, screw-off upper part, galvanized, weight approx. 11 kg, incl. top plate for winter protection.
v = bore for power cable through centre post Ø 7 cm.
w = bore hole for underground cable Ø 1.3 cm.
a = 23 cm, b = 28 cm, x = 16 cm, y = 17.5 cm, z = 15 cm.

art. no. **SZ150**

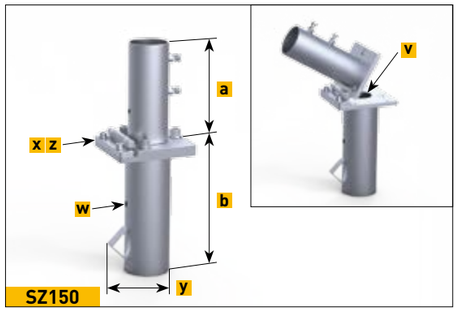

SZ150

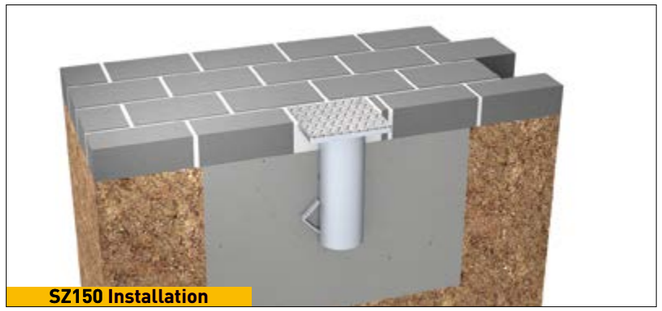
SZ150 Installation

SZ150 Installation

**Anchor tube to be embedded in concrete**
for an existing foundation with a bore hole of min. Ø 71 mm, 2 pieces, screw-off upper part. Bore hole filled with concrete to fix lower part of anchor tube. Existing foundation must be adequate in size for the designated parasol. Galvanized, weight approx. 5 kg, lower tube square, incl. top plate for winter protection.
a = 22 cm, b = 29 cm, x = Ø 10 cm, y = ☐5 cm

art. no. **SZ146**

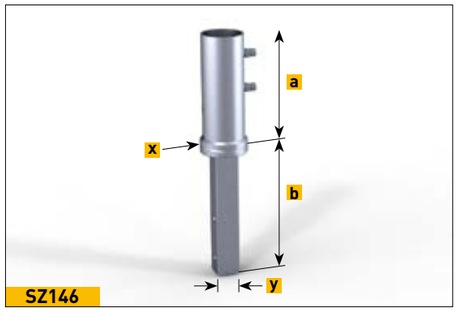

SZ146



## SCHATTELLO – stationary installation options

**Dowel-anchored plate**
2 pieces, screw-off upper part, galvanized, weight approx.15 kg.
a = 22 cm, x = ☐30 cm, t = 1.5 cm, z = Ø 1.8 cm.

art. no. **SZ261**

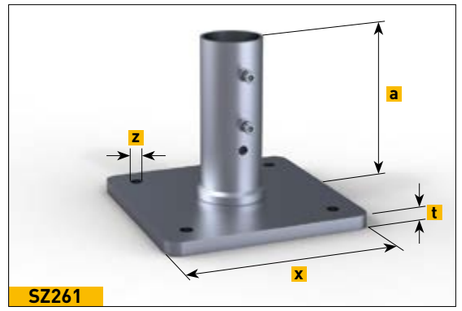

SZ261

SZ261 Installation

**Dowel-anchored plate, with placement hinge**
galvanized, 28 x 26 x 1.2 cm, weight approx. 11.2 kg.
a = 23 cm, x = 26 cm, y = 27.5 cm, t = 1.2 cm, z = Ø 1.8 cm.

art. no. **SZ131**

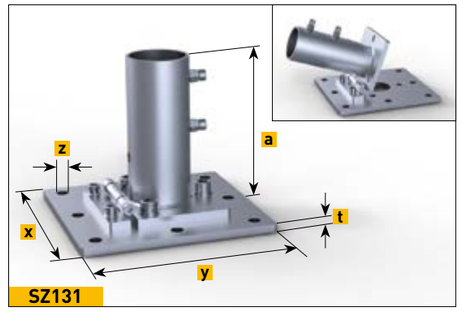

SZ131

SZ131 Installation

## SCHATTELLO – stationary installation options

**Dowel-anchored plate**
customized height to fit patio surface, anchor plate 50 x 50 cm, screw-off upper part, galvanized, weight approx. 32 kg, incl. top plate for winter protection.
Custom-made (not available on stock).

art. no. **SZ129**

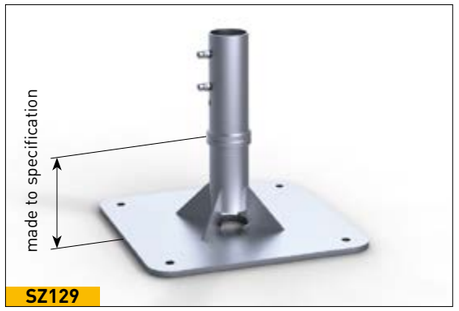

SZ129

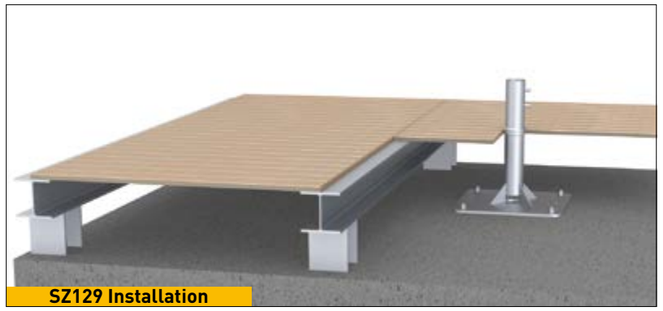
SZ129 Installation

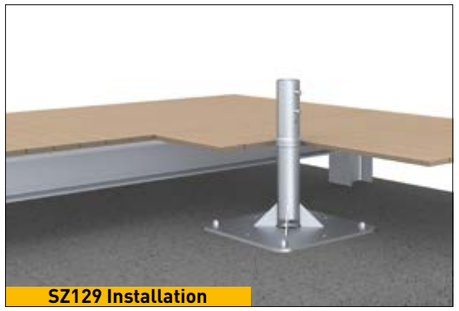
SZ129 Installation

**Dowel-anchored plate with placement hinge**
customized height to fit patio surface, anchor plate 50 x 50 cm, screw-off upper part, galvanized, weight approx. 33 kg,incl. top plate for winter protection.
Custom-made (not available on stock).

art. no. **SZ127**

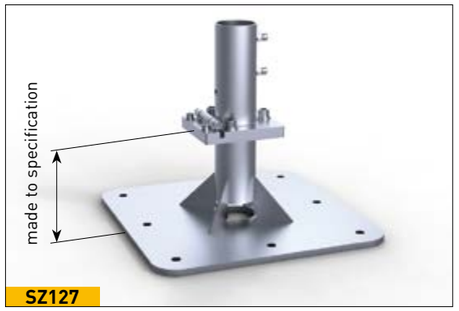

SZ127

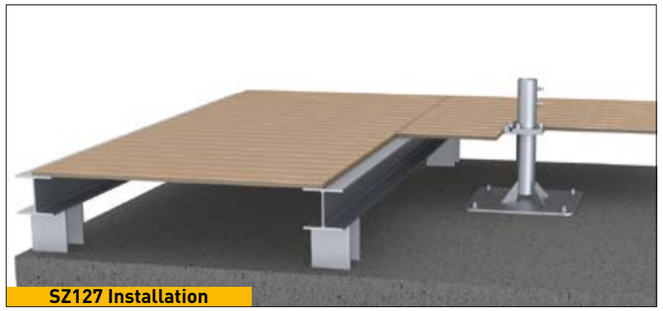
SZ127 Installation

SZ127 Installation

## SCHATTELLO – stationary installation options

✱ **NEW!**
**Flat-roof dowel-anchored plate**
externally insulated roof system, system-conform flat roof connection with liquid plastic, customized height to fit flat roof surface, dowel plate 50 x 50 cm, screw-off upper part, galvanized, weight approx. 38 kg,
incl. top plate for winter protection.
Custom-made (not available on stock).

art. no. **SZ186**

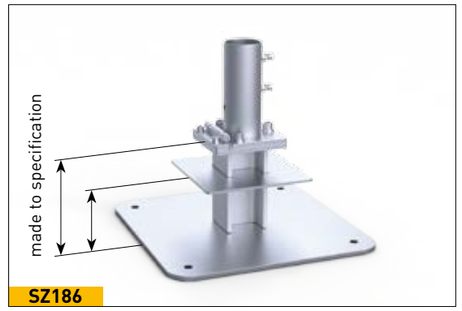

SZ186

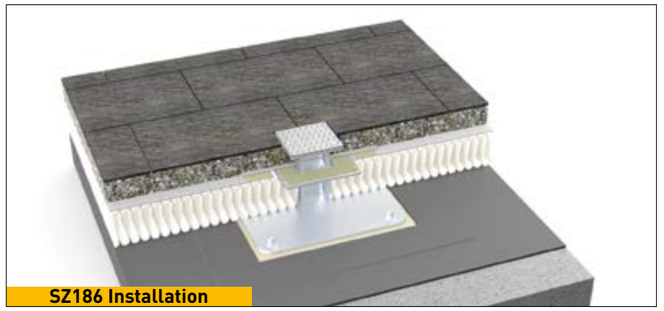
SZ186 Installation

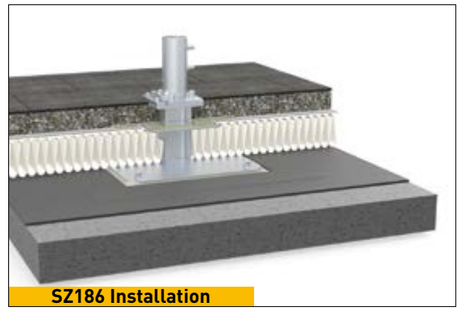
SZ186 Installation

**Anchor bolt**
bolt and nut, fits for SZ261, SZ131, SZ127, SZ129 und SZ186; approved for cracked and non-cracked concrete B25 to B55 (old compressive strength classes) C20/25 bis C50/60, (new EU classification), also suitable for concrete B15 and natural stone with dense structure. Concrete bore hole Ø 16 x 115 mm. in stainless steel A4, package contains 4 bolts. European Technical Approval ETA-05/0069.

art. no. **200900**

200900

**Screw-in ground anchor**
suitable for all sizes up to 28 m²; groundscrew with upper anchor tube, incl. standard parts, parts unscrewed on delivery,steel, galvanized acc. DIN EN ISO 1461, weight approx. 27 kg, incl. top plate for winter protection, delivered in two ready-to-assemble parts. For further information cf. page 141.

art. no. **SZ330**

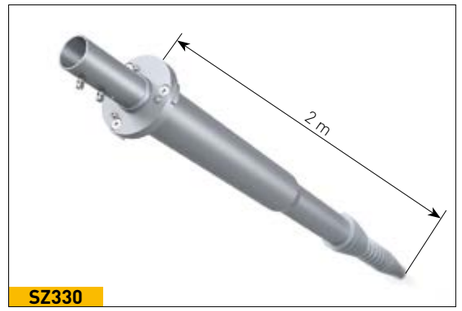

SZ330

**Screw-in ground anchor with placement hinge**
suitable for all sizes up to 28 m²; groundscrew with upper anchor tube, incl. standard parts, parts unscrewed on delivery,steel, galvanized acc. DIN EN ISO 1461, weight approx. 27 kg, incl. top plate for winter protection. delivered in two ready-to-assemble parts. For further information cf. page 141.

art. no. **SZ350**

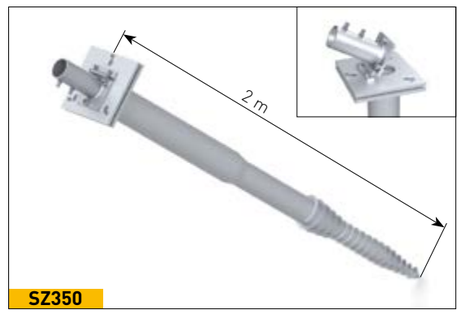

SZ350

# SCHATTELLO – stationary installation options

✱ **NEW!**
**Base plate**
Customized height to fit patio surface, for parasols up to 21 m² in size, to be screwed together on site, heaviest component approx. 50 kg, base plate size 145 x 145 cm, steel plate thickness x = 12 mm, screw-off upper part, galvanized, weight approx. 227 kg, incl. top plate for winter protection.
Custom-made (not available on stock).

art. no. **SZ240**

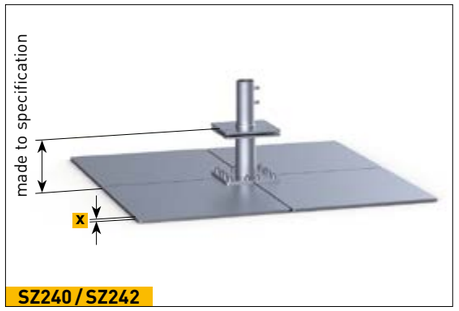

SZ240 / SZ242

✱ **NEW!**
**Base plate**
Customized height to fit patio surface, for parasols from 21 m² in size,to be screwed together on site, heaviest component approx. 63 kg, base plate size 145 x 145 cm, steel plate thickness x = 15 mm, screw-off upper part, galvanized, weight approx. 277 kg, incl. top plate for winter protection.
Custom-made (not available on stock).

art. no. **SZ242**

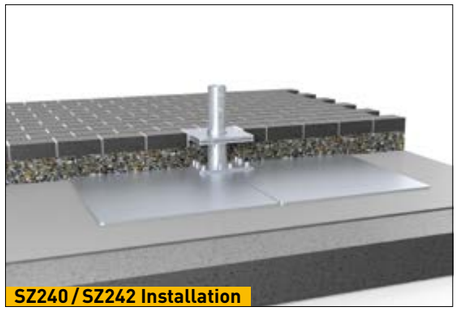
SZ240 / SZ242 Installation

✱ **NEW!**
**Base plate with placement hinge**
Customized height to fit patio surface, for parasols up to 21 m² in size, to be screwed together on site, heaviest component approx. 50 kg, base plate size 145 x 145 cm, steel plate thickness x = 12 mm, screw-off upper part, galvanized, weight approx. 220 kg, incl. top plate for winter protection.
Custom-made (not available on stock).

art. no. **SZ241**

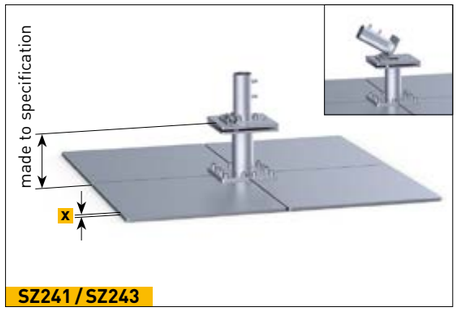

SZ241 / SZ243

✱ **NEW!**
**Base plate with placement hinge**
Customized height to fit patio surface, for parasols up to from 21 m² in size, to be screwed together on site, heaviest component approx. 63 kg, base plate size 145 x 145 cm, steel plate thickness x = 15 mm, screw-off upper part, galvanized, weight approx. 278 kg, incl. top plate for winter protection.
Custom-made (not available on stock).

art. no. **SZ243**

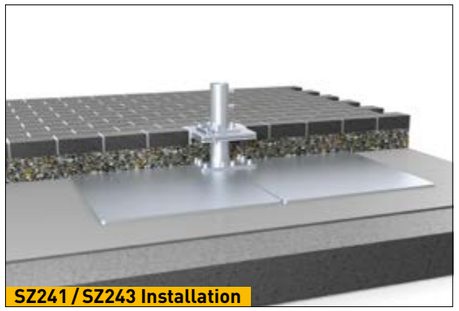
SZ241 / SZ243 Installation

**Theft pin**
padlock and pin, in stainless steel, for support pole Ø 76 mm.
suitable for retrofitting.

art. no. **200103**

200103

# ALBATROS

## The jewel of our large-area parasols

- optimal space utilization
- large-area all-weather protection
- easy handling
- extremely wind-resistant

**MAY – shade systems**
**Made in Germany**

Especially designed to meet the requirements of outdoor catering, this parasol concept provides an exclusive atmosphere in large areas. Its clear design is unique and lends its very own unmistakable charm to any outside area.These parasols stand out by robust construction. ALBATROS – technically speaking, SCHATTELLO's big brother.

*Operating mechanism*

*High-quality framework*

*Frame joints*

*Top plate*

*Canopy covering*

*Without valance*

*Straight valance*

# ALBATROS – Product Information

**Operating the parasol**
ALBATROS, our large-area parasol, is opened and closed with a smooth-running, removable stainless steel crank or with the help of a cordless drill (hex drill fitting).

The reliable drive-system with accurate integrated bevel gears guarantees effortless handling, even after years of usage. Electric drive on request.

**High-quality framework materials**
The poles of our parasols are all made of high-quality alloyed, extruded aluminium profiles. Frame surfaces are powder-coated, highly impact-proof, and available in pure white RAL 9010. Special colours available on request.
- support pole Ø 100 x 5 mm
- spoke dimensions 50 x 25 x 2 mm
- support strut dimensions 40 x 25 x 3 mm

**Robust central rod system**
Discs with support struts and spokes. In order to prevent the spokes from getting twisted, the lower die-cast disc is firmly welded to the support pole.

**Frame joints**
For us perfection in workmanship is an absolute must. Therefore, all moving axes are fitted with easily removable bolts. This extravagant technology ensures maximum stability and durability as well as easy execution of repairs.

**Top plate**
Elegant and graceful. Can be screwed off. Colour to match framework.

**Canopy covering fabric**
Due to a special self-tensioning telescopic spring system the awning remains perfectly taut, even after years of usage. The canopy covering can easily and quickly be exchanged by means of a practical hooking system. For fabrics and awning colours see Page 134 onward.

**Valance options**
- without valance
- straight valance
- Deluxe valance

cf. Page 140.

**When not in use**
The protective cover provided can easily be fitted over the shade during bad weather periods.

**Mounting**
- Pull parasol out of cardboard sleeve.
- Remove all packaging material.
- Place parasol mast in holding tube, that's all – ready for use in minutes!

**Installation options**
- mobile
- stationary

cf. Page 118 onward

**Additional equipment**
- Side sheets
- Rain gutter
- Tubular motor, heaters, lighting and loud speakers, cf. Page 110 and 122 onward

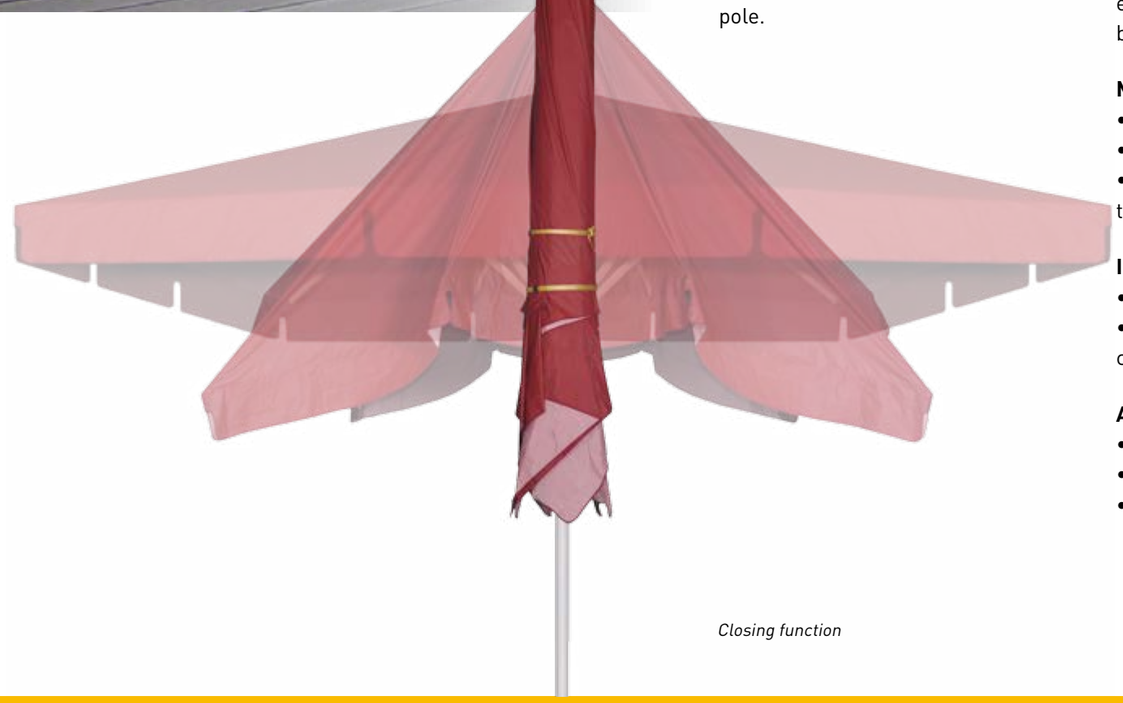

*Closing function*

# ALBATROS – Sizes and Technical Data

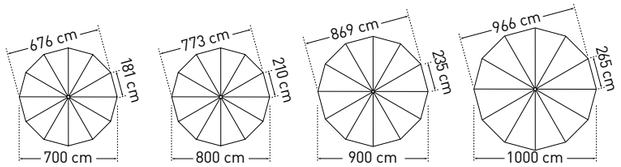


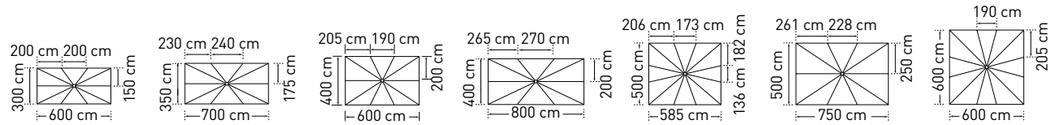


| | ALBATROS | | Ø 7.0 m | Ø 8.0 m | Ø 9.0 m | Ø 10.0 m [1] | 3.0 x 6.0 m | 3.5 x 7.0 m | 4.0 x 6.0 m | 4.0 x 8.0 m | 5.0 x 5.85 m | 5.0 x 7.5 m | 6.0 x 6.0 m |
|---|---|---|---|---|---|---|---|---|---|---|---|---|---|
| | Segments | | 12 | 12 | 12 | 12 | 10 | 10 | 10 | 10 | 12 | 10 | 12 |
| | Area | m² | 37 | 50 | 63 | 78 | 18 | 24,5 | 24 | 32 | 29 | 37,5 | 36 |
| A | Height closed incl. top plate | cm | 520 | 535 | 550 | 565 | 483 | 490 | 520 | 538 | 525 | 535 | 535 |
| B | Height opened incl. top plate | cm | 345 | 360 | 375 | 390 | 305 | 312 | 325 | 345 | 329 | 329 | 345 |
| C | Headroom with valance | cm | 210 | 208 | 206 | 205 | 216 | 216 | 213 | 217 | 213 | 213 | 210 |
| D | Headroom without valance | cm | 245 | 245 | 242 | 240 | 242 | 242 | 242 | 242 | 240 | 240 | 245 |
| E | Height of valance | cm | 33 | 33 | 33 | 33 | 33 | 33 | 33 | 33 | 33 | 33 | 33 |
| F | Ground clearance from spoke edge | cm | 155 | 120 | 85 | 50 | 132 | 83 | 145 | 70 | 130 | 72 | 95 |
| G | Crank height | cm | 92 | 92 | 92 | 92 | 92 | 92 | 70 | 92 | 92 | 92 | 92 |
| H | Height lower disc flange | cm | 190 | 205 | 220 | 235 | 198 | 205 | 183 | 205 | 190 | 200 | 200 |
| | Weight without packaging | kg | 128 | 133 | 147 | 160 | 99 | 104 | 104 | 129 | 106 | 129 | 113 |
| | Support pole diameter | mm | outer-Ø 100, pole thickness 5 | | | | outer-Ø 100, pole thickness 5 | | | | | | |
| | Packaging<br>cardboard sleeve: length 580 cm | | Ø 45 cm<br>approx. 30 kg | | | | Ø 45 cm<br>approx. 30 kg | | | | | | |
| | Installation base<br>length/width/min. depth | cm | 80 / 80 / 60 | | 90 / 90 / 60 | 100 / 100 / 60 | 70 / 70 / 60 | | | | | | |
| | Minimum ballast<br>incl. full frame pedestal AZ411 | | 8 layers of concrete slabs<br>= approx. 980 kg | | 10 layers of concrete slabs<br>= appr. 1240 kg | 13 layers of concrete slabs<br>= appr. 1560 kg | 4 layers of concrete slabs<br>= appr. 480 kg | 6 layers of concrete slabs<br>= appr. 720 kg | 6 layers of concrete slabs<br>= appr. 720 kg | 8 layers of concrete slabs<br>= appr. 980 kg | 6 layers of concrete slabs<br>= appr. 720 kg | 8 layers of concrete slabs<br>= appr. 980 kg | 6 layers of concrete slabs<br>= appr. 720 kg |

[1] When concrete slabs are used as ballast, the shade cannot be fully closed because of the length of the spokes. In this case the length of the mast can be extended by 20 cm at an extra charge (cf. price-list Accessories and Bases). Note that the height dimensions then have to be increased by 20 cm.

The heights specified are for parasols with MayTex covering fabric that are mounted in an anchor tube AZ120. The increase in height for parasols with other installation bases can be seen in the list below:

Full frame pedestal: AZ111 + 1.5 cm
Full frame pedestal: AZ112 + 2 cm
Anchor plate: AZ024 + 1.5 cm

*3D view of installation base with top plate for winter protection. Base must be frost-proof and enlarged if the ground is unstable.*

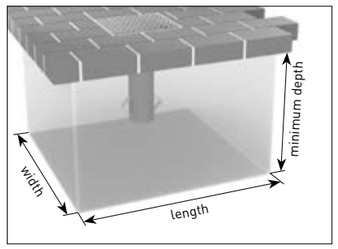


Intermediate and special sizes on request.
All measurements are to be understood as approximate.

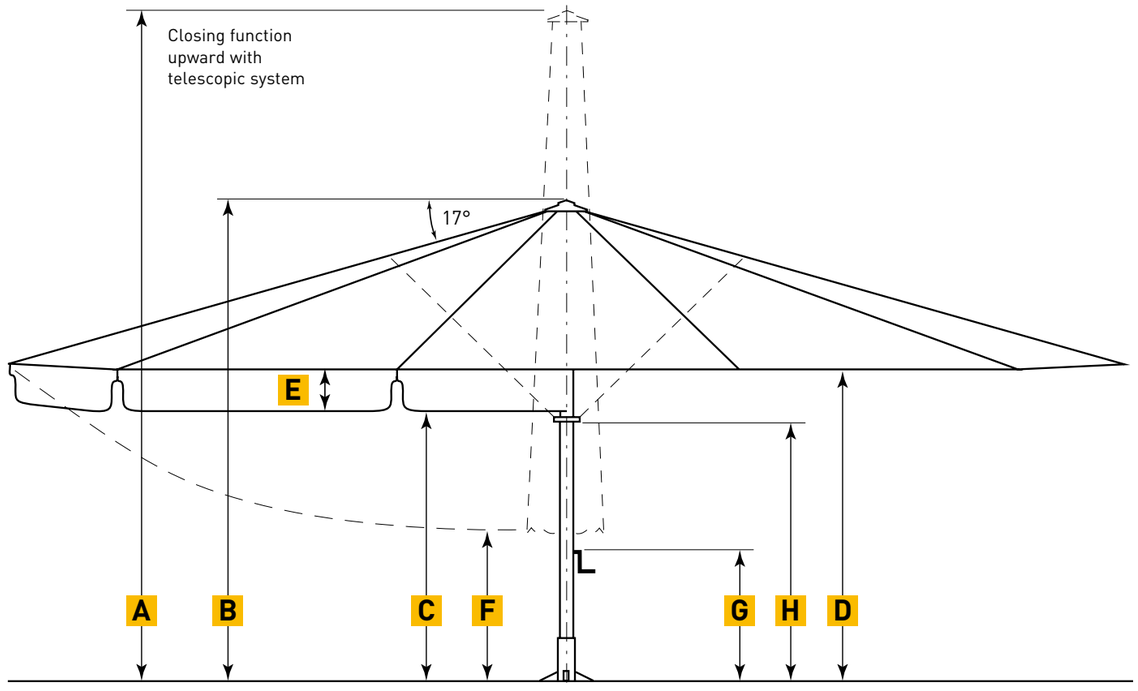

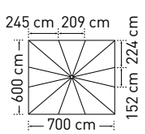


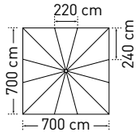


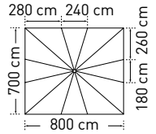


| | ALBATROS | | 6.0 x 7.0 m | 7.0 x 7.0 m [1] | 7.0 x 8.0 m [1] |
|---|---|---|---|---|---|
| | Segments | | 12 | 12 | 12 |
| | Area | m² | 41 | 49 | 56 |
| A | Height closed incl. top plate | cm | 555 | 550 | 570 |
| B | Height opened incl. top plate | cm | 359 | 355 | 375 |
| C | Headroom with valance | cm | 213 | 210 | 210 |
| D | Headroom without valance | cm | 242 | 245 | 245 |
| E | Height valance | cm | 33 | 33 | 33 |
| F | Ground clearance from spoke edge | cm | 72 | 38 | 25 |
| G | Crank height | cm | 92 | 92 | 92 |
| H | Height lower disc flange | cm | 207 | 215 | 235 |
| | Weight without packaging | kg | 121 | 133 | 160 |
| | Support pole diameter | mm | outer-Ø 100, pole thickness 5 | | |
| | Packaging<br>cardboard sleeve: length 580 cm | | Ø 45 cm<br>approx. 30 kg | | |
| | Installation base<br>length/width/min. depth | cm | 80 / 80 / 60 | | 90 / 90 / 80 |
| | Minimum ballast<br>incl. full frame pedestal AZ411 | | 8 layers of concrete slabs<br>= approx. 980 kg | | 10 layers of concrete slabs<br>= approx. 1240 kg |

[1] When concrete slabs are used as ballast, the shade cannot be fully closed because of the length of the spokes. In this case the length of the mast can be extended by 20 cm at an extra charge (cf. price-list Accessories and Bases). Note that the height dimensions then have to be increased by 20 cm.

The heights specified are for parasols with MayTex covering fabricthat are mounted in an anchor tube AZ120. The increase in height for parasols with other installation bases can be seen in the list below:

Full frame pedestal: AZ111 + 1.5 cm
Full frame pedestal: AZ112 + 2 cm
Anchor plate: AZ024 + 1.5 cm

*3D view of installation base with top plate for winter protection. Base must be frost-proof and enlarged if the ground is unstable.*

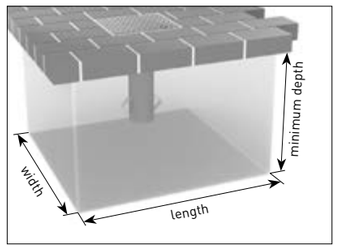


Intermediate and special sizes on request.
All measurements are to be understood as approximate.

# ALBATROS – Sizes and Technical Data

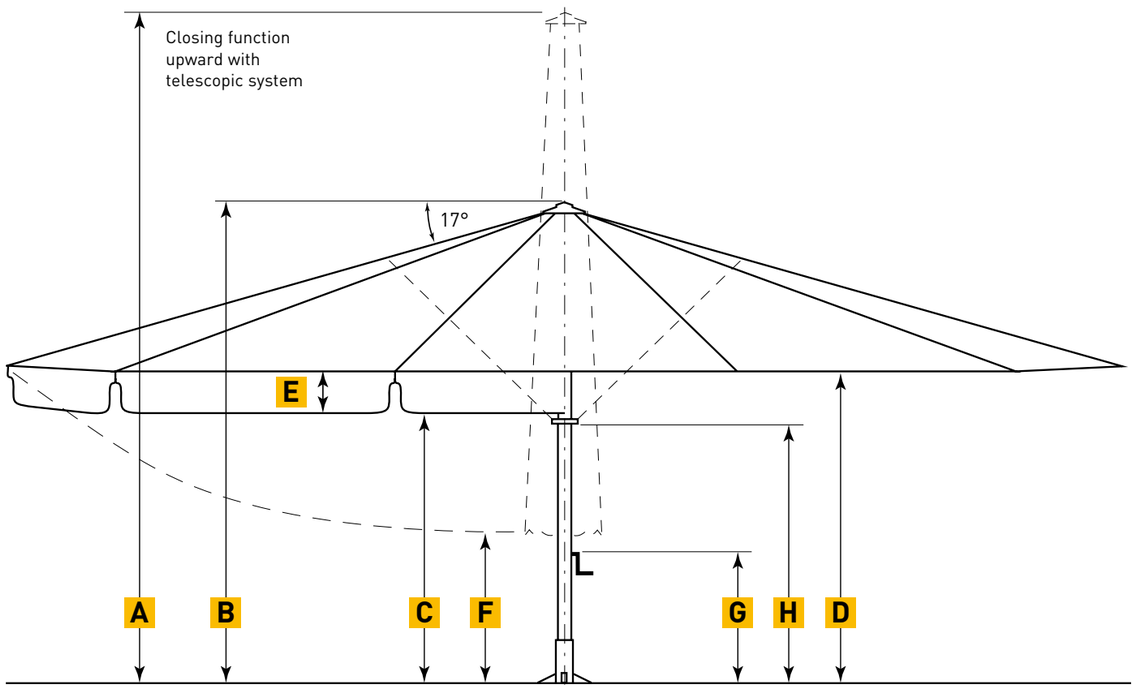

*Mercedes-Benz SLR McLaren VIP-Lounge, Circuit Paul Ricard HTTT, Le Castellet*

AA130

**Additional protective sleeve**
with zipper, grey tarp material.
Please state parasol size.

art. no. **AA130**

AA132 / AA134

**Additional protective sleeve**
with telescopic system and zipper, length of telescope 4.5 m, grey tarp material. Essential for wind-exposed and coastal locations.
Please state parasol size.

art. no. **AA132**

**Protective sleeve for parasols with integrated heaters**
with telescopic system and zipper**,** length of telescope 4.5 m, grey tarp material. Please state parasol size.

art. no. **AA134**

**Hexagonal fitting**
for speedy opening and closing of parasol with battery-powered drill.

art. no. **200112**

* **NEW!**
Albatros-Aluminium frame system **with seawater-resistant stainless steel frame joints** V4A (1.4401, AISI 316).

art. no. **350118**

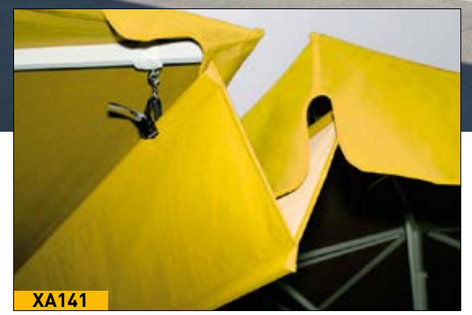

XA141

**Rain gutter**
in MayTex-Poly, with aluminium rods for stabilization. Can only be used with "straight valance".

art. no. **XA141**

AA141 01

**Glass-fibre reinforced plastic holder for side sheets and rain gutter**
1 piece per spoke required.

With 1 eyelet screw. art. no. **AA141 01**

With 2 eyelet screws. art. no. **AA141 02**

**Holder for suspended rain gutter**
1 piece per spoke required.

art. no. **AA150**

**Length extension of centre pole**
State required additional length in cm (max. 70 cm).

**Centre- pole shortening**
Length on request, dependent on parasol size.

**Special frame paint finish**
Please state colour of powder-coating in RAL.

**Canopy covering PVC-Era**
approx. 380g/m².

**Side sheets**
Textile in MayTex-Poly, cf. Page 132 onward.

Side sheets

## Tubular motor

- product video at www.may-online.com

Video

202116

202105

**Tubular motor**
Fully integrated in parasol mast, invisible; start-up via Plug and Play, open and close by pressing function key of radio transmitter for 3 seconds (for avoidance of unintentional switching), range of radio transmitter to parasol mast approx. 25 m; incl. hand crank for use in case of power cut; incl. plug connector of ground cable to motor cable as well as shrink tubing; the motors can only be used with anchor tubes AZ210, AZ120, AZ024, AZ128 or AZ186. Compatible with LED-lighting, not compatible with heaters or loud-speakers; Power: 230V-/50 Hz

Order No. **202112**

202115

**Single-channel hand-held radio transmitter**
Single-channel device sufficient if only one parasol is to be controlled. Simultaneous control of one or any number of parasols possible. (2 signals)

art. no. **202105**

202105 + 202115

*** NEW!**
**Holder for radio transmitter**
suitable for single-channel hand-held radio transmitter 202105.
To be screwed to the wall.

art. no. **202115**

202106

**18-channel hand-held radio transmitter**
For the control of several parasols; can be used to control solitary as well as grouped parasols, programming possible in our company after prior date arrangement. 18-channel device. For separate control of up to 18 parasols (36 signals).

art. no. **202106**

202106 + 202116

*** NEW!**
**Holder for radio transmitter**
suitable for 18-channel hand-held radio transmitter 202106.
To be screwed to the wall.

art. no. **202116**

202104

*** NEW!**
**Wall-mounted radio transmitter**
Radio transmitter for permanent screw-on installation. The transmitter must have direct visual contact with the radio receiver. Sufficient for the control of one parasol. Simultaneous control of one or any number of parasols possible (2 signals).

art. no. **202104**

202108

*** NEW!**
**BUS transmitting station**
Direct visual contact with the radio receiver necessary.
Suitable for the separate control of 2 parasols (4 signals).

art. no. **202108**

202110

**Wind sensor**
Only to be used as a supportive measure. In case of rising wind, the operator of the business must see that the parasols are closed and secured with a strap. The wind sensor measures the speed of the wind and passes on a signal to the tubular motor, which then automatically closes the parasols. The wind threshold value can be programmed with an adjustable potentiometer. Solar-cell and radio transmission, no cabling needed. To be fastened in a suitable position with the two dowels supplied in the package. The location should be as exposed as possible and in the vicinity of the parasols. Direct visual contact with the radio receiver necessary.

art. no. **202110**

Below you will find a list of our range of all-in kits on offer.

Choose a parasol and one of the kits listed. From page 122 onwards you will find more information on the individual kit components. The kits can, however, only be applied in combination with installation options AZ024, AZ120, AZ128, AZ186 and AZ210.

# Slim lights

## Kit A 4 art. no. 350957

| 230 V connection. Kit consists of: | quantity | art. no. |
|---|---|---|
| W-MAY plug connector | 1 | 350930 |
| Power supply within centre pole | 1 | 200369 |
| **Slim light 13 W** | 4 | 202090 |

## Kit A 6 art. no. 350958

| 230 V connection. Kit consists of: | quantity | art. no. |
|---|---|---|
| W-MAY plug connector | 1 | 350930 |
| Power supply within centre pole | 1 | 200369 |
| **Slim light 13 W** | 6 | 202090 |

## Kit A 8 art. no. 350959

| 230 V connection. Kit consists of: | quantity | art. no. |
|---|---|---|
| W-MAY plug connector | 1 | 350930 |
| Power supply within centre pole | 1 | 200369 |
| **Slim light 13 W** | 8 | 202090 |

## Kit A 10 art. no. 350960

| 230 V connection. Kit consists of: | quantity | art. no. |
|---|---|---|
| W-MAY plug connector | 1 | 350930 |
| Power supply within centre pole | 1 | 200369 |
| **Slim light 13 W** | 10 | 202090 |

## Kit A 12 art. no. 350961

| 230 V connection. Kit consists of: | quantity | art. no. |
|---|---|---|
| W-MAY plug connector | 1 | 350930 |
| Power supply within centre pole | 1 | 200369 |
| **Slim light 13 W** | 12 | 202090 |

# LED lighting

## Kit A 4LED art. no. 350962

| 230 V connection. Kit consists of: | quantity | art. no. |
|---|---|---|
| W-MAY plug connector | 1 | 350930 |
| Power supply within centre pole | 1 | 200369 |
| Electrical harness | 1 | 200566 |
| Power supply unit (PSU) for max. 4 LED bars, integrated in parasol | 1 | 350270 |
| **LED bar, warm white** | 4 | 350274 |

## Kit A 6LED art. no. 350963

| 12 V connection. Kit consists of: | quantity | art. no. |
|---|---|---|
| W-MAY plug connector | 1 | 350930 |
| Power supply within centre pole | 1 | 200369 |
| Power supply unit (PSU) for max. 20 LED bars, installed on the outdoor wall or inside the house | 1 | 350271 |
| **LED bar, warm white** | 6 | 350274 |

## Kit A 8LED art. no. 350964

| 12 V connection. Kit consists of: | quantity | art. no. |
|---|---|---|
| W-MAY plug connector | 1 | 350930 |
| Power supply within centre pole | 1 | 200369 |
| Power supply unit (PSU) for max. 20 LED bars, installed on the outdoor wall or inside the house | 1 | 350271 |
| **LED bar, warm white** | 8 | 350274 |

## Kit A 10LED art. no. 350965

| 12 V connection. Kit consists of: | quantity | art. no. |
|---|---|---|
| W-MAY plug connector | 1 | 350930 |
| Power supply within centre pole | 1 | 200369 |
| Power supply unit (PSU) for max. 20 LED bars, installed on the outdoor wall or inside the house | 1 | 350271 |
| **LED bar, warm white** | 10 | 350274 |

## Kit A 12LED art. no. 350966

| 12 V connection. Kit consists of: | quantity | art. no. |
|---|---|---|
| W-MAY plug connector | 1 | 350930 |
| Power supply within centre pole | 1 | 200369 |
| Power supply unit (PSU) for max. 20 LED bars, installed on the outdoor wall or inside the house | 1 | 350271 |
| **LED bar, warm white** | 12 | 350274 |

# Infrared heaters + slim lights

In standard cases these kits are firmly connected with the underground cable. Alternatively, plug connector S1, art. no. 350107 can be used.

## Kit A 6 4A art. no. 202066

| 400 V connection. Kit consists of: | quantity | art. no. |
|---|---|---|
| Power supply within centre pole | 1 | 200369 |
| Electrical harness | 1 | 200566 |
| Automatic auxiliary cut out switch | 1 | 202051 |
| Cabling, long (only possible along diagonal spokes) | 4 | 200579 |
| Swivelling holder | 4 | 200577 |
| **Infrared heater** | 4 | 200408 |
| **Slim light 13 W** | 6 | 202090 |

For parasol sizes 3 x 6 m, 3.5 x 7 m with valance, 4 x 6 m, 4 x 8 m with valance and 5 x 5.85 m with valance, please opt for Kit A 6 4Z.

## Kit A 8 4A art. no. 350984

| 400 V connection. Kit consists of: | quantity | art. no. |
|---|---|---|
| Power supply within centre pole | 1 | 200369 |
| Electrical harness | 1 | 200566 |
| Automatic auxiliary cut out switch | 1 | 202051 |
| Cabling, long (only possible along diagonal spokes) | 4 | 200579 |
| Swivelling holder | 4 | 200577 |
| **Infrared heater** | 4 | 200408 |
| **Slim light 13 W** | 8 | 202090 |

For parasol sizes 3 x 6 m, 3.5 x 7 m with valance, 4 x 6 m, 4 x 8 m with valance and 5 x 5.85 m with valance, please opt for Kit A 8 4Z.

## Kit A 6 4Z art. no. 350061

| 400 V connection. Kit consists of: | quantity | art. no. |
|---|---|---|
| Power supply within centre pole | 1 | 200369 |
| Electrical harness | 1 | 200566 |
| Automatic auxiliary cut out switch | 1 | 202051 |
| Cabling, short (Please state position intended) | 4 | 200585 |
| Swift-hold spar | 4 | 200578 |
| **Infrared heater** | 4 | 200408 |
| **Slim light 13 W** | 6 | 202090 |

## Kit A 8 4Z art. no. 350985

| 400 V connection. Kit consists of: | quantity | art. no. |
|---|---|---|
| Power supply within centre pole | 1 | 200369 |
| Electrical harness | 1 | 200566 |
| Automatic auxiliary cut out switch | 1 | 202051 |
| Cabling, short (Please state position intended) | 4 | 200585 |
| Swift-hold spar | 4 | 200578 |
| **Infrared heater** | 4 | 200408 |
| **Slim light 13 W** | 8 | 202090 |



# Infrared heaters + LED lighting

In standard cases these kits are firmly connected with the underground cable. Alternatively, plug connector S1, art. no. 350107 (400 V) can be used together with W-MAY plug connector, art. no. 350930 (12V).

## Kit A 6LED 4A art. no. 350978

| 12 V + 400 V connection. Kit consists of: | quantity | art. no. |
|---|---|---|
| Power supply within centre pole | 1 | 200369 |
| Electrical harness | 1 | 200566 |
| Automatic auxiliary cut out switch | 1 | 202051 |
| Cabling, long (only possible along diagonal spokes) | 4 | 200579 |
| Swivelling holder | 4 | 200577 |
| **Infrared heater** | 4 | 200408 |
| Power supply unit (PSU) for max. 20 LED bars, installed on the outdoor wall or inside the house | 1 | 350271 |
| **LED bar, warm white** | 6 | 350274 |

For parasol sizes 3 x 6 m, 3.5 x 7 m with valance, 4 x 6 m, 4 x 8 m with valance and 5 x 5.85 m with valance, please opt for Kit A 6LED 4Z.

## Kit A 8LED 4A art. no. 350980

| 12 V + 400 V connection. Kit consists of: | quantity | art. no. |
|---|---|---|
| Power supply within centre pole | 1 | 200369 |
| Electrical harness | 1 | 200566 |
| Automatic auxiliary cut out switch | 1 | 202051 |
| Cabling, long (only possible along diagonal spokes) | 4 | 200579 |
| Swivelling holder | 4 | 200577 |
| **Infrared heater** | 4 | 200408 |
| Power supply unit (PSU) for max. 20 LED bars, installed on the outdoor wall or inside the house | 1 | 350271 |
| **LED bar, warm white** | 8 | 350274 |

For parasol sizes 3 x 6 m, 3.5 x 7 m with valance, 4 x 6 m, 4 x 8 m with valance and 5 x 5.85 m with valance, please opt for Kit A 8LED 4Z.

## Kit A 6LED 4Z art. no. 350979

| 12 V + 400 V connection. Kit consists of: | quantity | art. no. |
|---|---|---|
| Power supply within centre pole | 1 | 200369 |
| Electrical harness | 1 | 200566 |
| Automatic auxiliary cut out switch | 1 | 202051 |
| Cabling, short (Please state position intended) | 4 | 200585 |
| Swift-hold spar | 4 | 200578 |
| **Infrared heater** | 4 | 200408 |
| Power supply unit (PSU) for max. 20 LED bars, installed on the outdoor wall or inside the house | 1 | 350271 |
| **LED bar, warm white** | 6 | 350274 |

## Kit A 8LED 4Z art. no. 350981

| 12 V + 400 V connection. Kit consists of: | quantity | art. no. |
|---|---|---|
| Power supply within centre pole | 1 | 200369 |
| Electrical harness | 1 | 200566 |
| Automatic auxiliary cut out switch | 1 | 202051 |
| Cabling, short (Please state position intended) | 4 | 200585 |
| Swift-hold spar | 4 | 200578 |
| **Infrared heater** | 4 | 200408 |
| Power supply unit (PSU) for max. 20 LED bars, installed on the outdoor wall or inside the house | 1 | 350271 |
| **LED bar, warm white** | 8 | 350274 |

# LED lighting + tubular motor

Please order radio transmitter separately.

## Kit A 4LED M art. no. 350967

| 12 V + 230 V connection. Kit consists of: | quantity | art. no. |
|---|---|---|
| W-MAY plug connector | 1 | 350930 |
| H1-MAY plug connector | 1 | 350931 |
| Power supply within centre pole | 1 | 200369 |
| Electrical harness | 1 | 350933 |
| Power supply unit (PSU) for max. 4 LED bars, installed on the outdoor wall or inside the house | 1 | 350270 |
| **LED bar, warm white** | 4 | 350274 |
| **Tubular motor** | 1 | 202112 |

## Kit A 6LED M art. no. 350968

| 12 V + 230 V connection. Kit consists of: | quantity | art. no. |
|---|---|---|
| W-MAY plug connector | 1 | 350930 |
| H1-MAY plug connector | 1 | 350931 |
| Power supply within centre pole | 1 | 200369 |
| Electrical harness | 1 | 350933 |
| Power supply unit (PSU) for max. 20 LED bars, installed on the outdoor wall or inside the house | 1 | 350271 |
| **LED bar, warm white** | 6 | 350274 |
| **Tubular motor** | 1 | 202112 |

## Kit A 8LED M art. no. 350969

| 12 V + 230 V connection. Kit consists of: | quantity | art. no. |
|---|---|---|
| W-MAY plug connector | 1 | 350930 |
| H1-MAY plug connector | 1 | 350931 |
| Power supply within centre pole | 1 | 200369 |
| Electrical harness | 1 | 350933 |
| Power supply unit (PSU) for max. 20 LED bars, installed on the outdoor wall or inside the house | 1 | 350271 |
| **LED bar, warm white** | 8 | 350274 |
| **Tubular motor** | 1 | 202112 |

## Kit A 10LED M art. no. 350970

| 12 V + 230 V connection. Kit consists of: | quantity | art. no. |
|---|---|---|
| W-MAY plug connector | 1 | 350930 |
| H1-MAY plug connector | 1 | 350931 |
| Power supply within centre pole | 1 | 200369 |
| Electrical harness | 1 | 350933 |
| Power supply unit (PSU) for max. 20 LED bars, installed on the outdoor wall or inside the house | 1 | 350271 |
| **LED bar, warm white** | 10 | 350274 |
| **Tubular motor** | 1 | 202112 |

## Kit A 12LED M art. no. 350971

| 12 V + 230 V connection. Kit consists of: | quantity | art. no. |
|---|---|---|
| W-MAY plug connector | 1 | 350930 |
| H1-MAY plug connector | 1 | 350931 |
| Power supply within centre pole | 1 | 200369 |
| Electrical harness | 1 | 350933 |
| Power supply unit (PSU) for max. 20 LED bars, installed on the outdoor wall or inside the house | 1 | 350271 |
| **LED bar, warm white** | 12 | 350274 |
| **Tubular motor** | 1 | 202112 |

## ALBATROS – mobile installation options

**Full frame pedestal**
frame size 112 x 112 cm, total height 46 cm, height of frame x = 9 cm, weight approx. 60 kg, galvanized, theft pin as standard fitting. Suited for XZ49 or standard concrete slabs 50 x 50 x 5 cm (concrete slabs with cut off edge).

art. no. **AZ111**

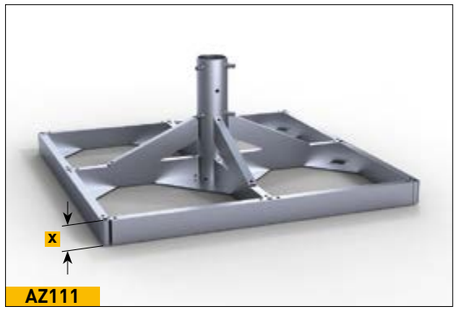

AZ111

**Full frame pedestal**
incl. 8 diagonal support levelling screws, frame size 112 x 112 cm, total height 48 cm, max. 53 cm, weight approx. 63 kg, galvanized, theft pin as standard fitting. Suited for XZ49 or standard concrete slabs 50 x 50 x 5 cm (concrete slabs with cut off edge).

art. no. **AZ112**

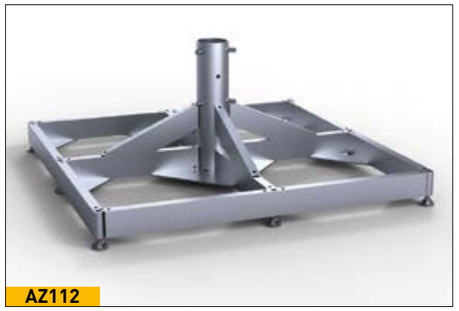
AZ112

✱ **NEW!**
**Full frame pedestal with placement hinge**
customized height to fit patio surface,incl. 8 diagonal support levelling screws, frame size 112 x 112 cm, weight approx. 74 kg, galvanized, theft pin as standard fitting. Suited for XZ49 or standard concrete slabs 50 x 50 x 5 cm (concrete slabs with cut off edge). Custom-made pedestals (not available on stock).

art. no. **AZ210**

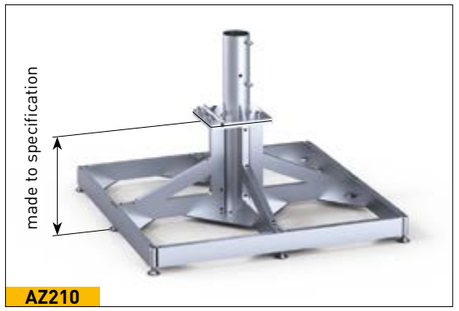

AZ210

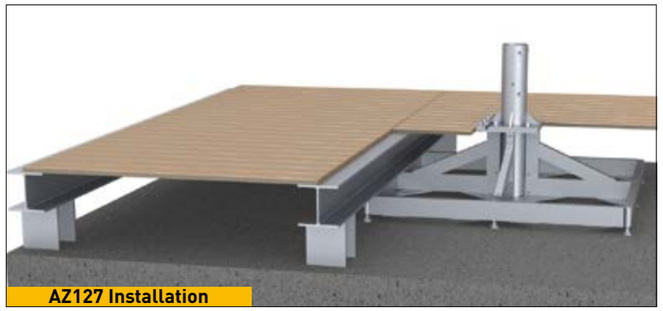
AZ127 Installation

AZ210 Installation

**Concrete slabs with cut off edge**
1 set = 4 slabs, each 50 x 50 x 5 cm. Cut off edge 70 mm x 45°.
weight per slab: approx. 28 kg, total weight approx. 112 kg.

art. no. **XZ49**

XZ49

## ALBATROS – stationary installation options

**Anchor foot to be embedded in concrete with placement hinge**
2 pieces, theft pin as standard fitting,galvanized, weight approx. 20,5 kg. Pre-drill parasol with anchor foot on site.
v = bore for power cable through centre post Ø 8.5 cm.
w = bore hole for underground cable Ø 1.3 cm.
a = 36 cm, b = 41 cm, x = 24 cm, y = 27.3 cm, z = 14.5 cm

art. no. **AZ120**

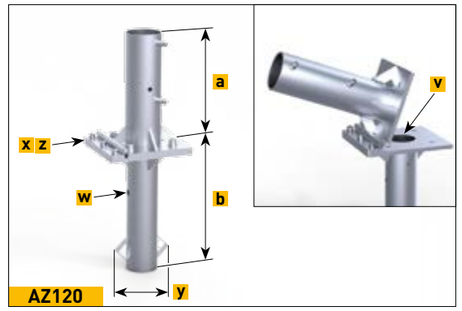

AZ120

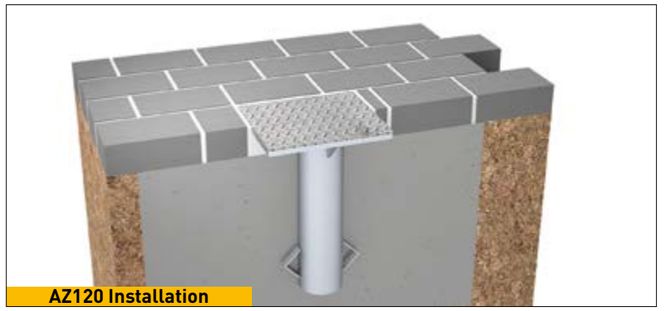
AZ120 Installation

AZ120 Installation

**Dowel-anchored plate with placement hinge**
2 pieces, theft pin as standard fitting, galvanized, weight approx. 22 kg. Pre-drill parasol to top of anchor plate on site.
Two packages of heavy-duty anchor bolts needed (art. no. 200900).
a = 37.5 cm, x = 34 cm, y = 37.5 cm, t = 1.2 cm, z = Ø 1.8 cm.

art. no. **AZ024**

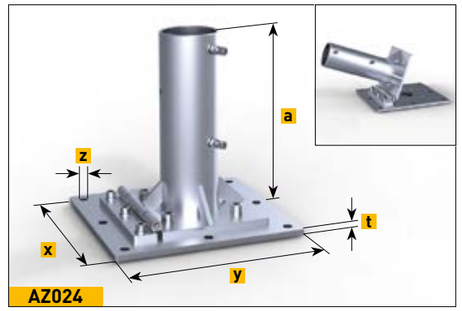

AZ024

AZ024 Installation

**Theft pin**
padlock and pin, in stainless steel, for support pole Ø 100 mm. suitable for retrofitting.

art. no. **200826**

200826

## ALBATROS – stationary installation options

**Dowel-anchored plate with placement hinge**
customized height to fit patio surface, 2 pieces, theft pin as standard fitting, galvanized, anchor plate 50 x 50 cm. Pre-drill parasol to top of anchor plate on site. Two packages of heavy-duty anchor bolts needed (art. no. 200900).
Custom-made (not available on stock).

art. no. **AZ128**

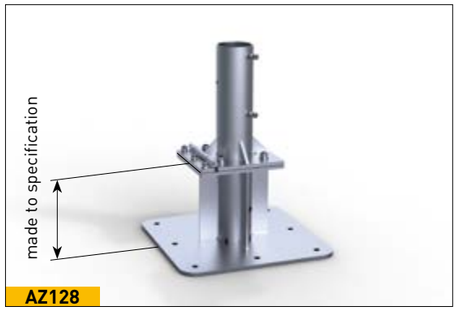

AZ128

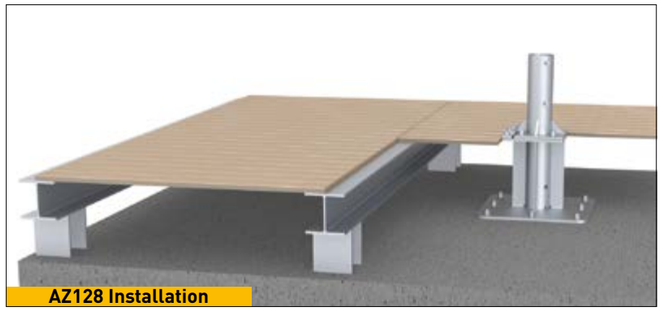
AZ128 Installation

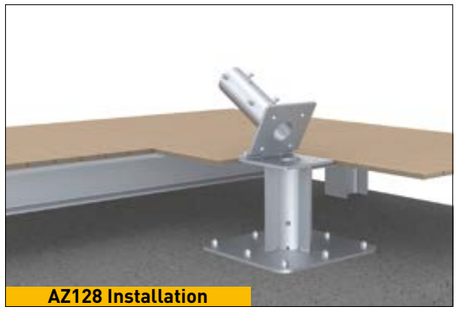
AZ128 Installation

✱ **NEW!**
**Flat- roof dowel-anchored plate with placement hinge**
externally insulated roof system, system- conform flat roof connection with liquid plastic, customized height to fit flat roof surface, screw-off upper part, galvanized, anchor plate 50 x 50 cm. Pre-drill parasol to top of anchor plate on site. Two packages of heavy-duty anchor bolts needed. (art. no. 200900).
Custom-made (not available on stock).

art. no. **AZ186**

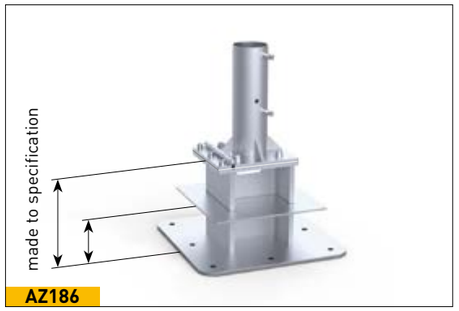

AZ186

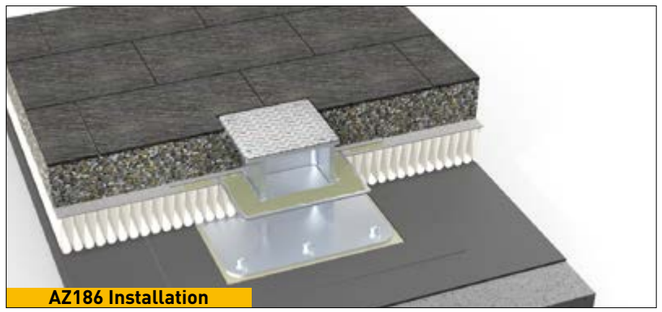
AZ186 Installation

AZ186 Installation

**Anchor bolt**
bolt and nut, fits for AZ024, AZ128 and AZ186 (2 packages needed) approved for cracked and non-cracked concrete B25 to B55 (old compressive strength classes) C20/25 bis C50/60, (new EU classification), also suitable for concrete B15 and natural stone with dense structure. Concrete bore hole Ø 16 x 115 mm. in stainless steel A4, package contains 4 bolts. European Technical Approval ETA-05/0069.

art. no. **200900**

200900



## ALBATROS – installation options

## Premium parasol equipment for patios and smoking areas.

Parasols provide shelter from the sun and rain – a MAY premium parasol kit does more. Thanks to efficient lighting and infrared heating systems, this upmarket parasol concept for outdoor venues creates a warm and inviting ambience any time of the day and every season of the year. A feel-good environment created by maximum-comfort equipment helps to extend the outdoor season – your customers stay and enjoy. Moreover, you can offer them a comfortable smoking area outside. A place for smokers – a plus for your business!

**Optimal heat range**
The rays of the infrared heaters are emitted in thermal cones and thus form a protective belt of heat.

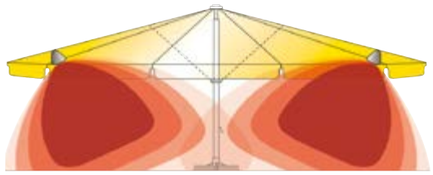

**Well-devised safety precautions**
The use of electricity outdoors requires particularly careful safety measures. All our equipment materials and components are authorized for outdoor use and are splash-proof.

Every parasol equipped with heaters has been carefully tested and legalized. If requested, an automatic parasol closure cut-out switch can be installed.

**Up-to-date energy efficiency**
In view of running electricity costs, our parasol concept is the ideal solution: approx. 90% heat output, i.e. about 30% energy-saving compared with conventional systems. To avoid wasting electricity, each infrared heater can be activated individually with a case-mounted switch. A timer switch is an ideal way of saving energy in smoking areas. The customer simply presses the pushbutton and the heat is turned off after about 15 minutes.

**Ultra-easy handling**
Service staff will have no problems in handling our parasols. When installed with premium equipment, MAY parasols can easily be closed without prior removal of heaters or lights.



**Wind shelter for smoking areas**
With the help of side sheets, your giant parasol will become all-weatherproof and offer shelter from side winds. The polyester fabric is robust and durable and at the same time offers ample space for commercial branding of your choice. Several options are available: with or without windows, or with a continuous light belt. cf. Page 132 onward.



**Example of heaters and lights**
mounted on Type Schattello
with anchor tube SZ 150
**KIT S44A**

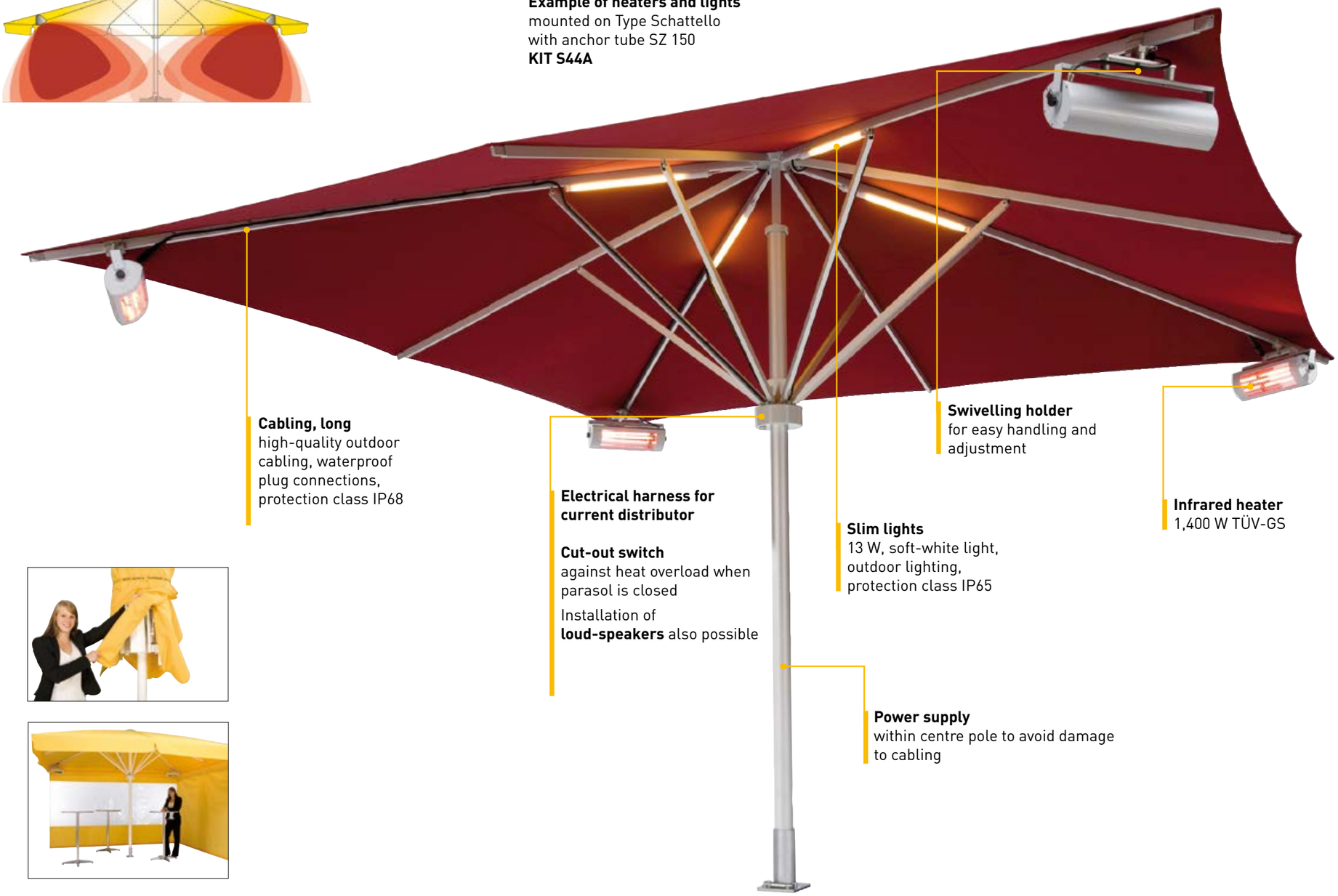

**Cabling, long**
high-quality outdoor cabling, waterproof plug connections, protection class IP68

**Swivelling holder**
for easy handling and adjustment

**Infrared heater**
1,400 W TÜV-GS

**Electrical harness for current distributor**

**Cut-out switch**
against heat overload when parasol is closed

Installation of **loud-speakers** also possible

**Slim lights**
13 W, soft-white light, outdoor lighting, protection class IP65

**Power supply**
within centre pole to avoid damage to cabling

## Customized options and kit components

Compile your very own parasol equipment. As you can see from the list opposite, the kit components cover 8 main aspects.

For a made-to-measure solution just choose the equipment items that best suit your specific requirements.

**1. Power supply**
**2. Current distribution**
**3. Mounting of heaters**
**4. Infrared heaters**
**5. Safety and energy-saving options**
**6. Slim lights**
**7. LED lighting**
**8. Stereo loud-speakers**

SZ150

350930

350107

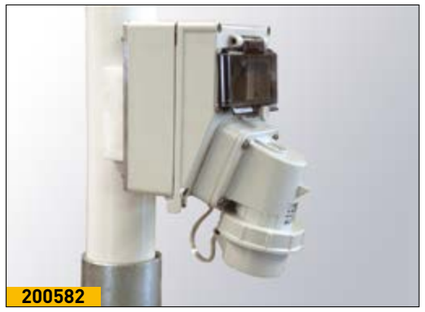
200582

## 1. Power supply

**Anchor tube with placement hinge** art. no. SZ150
Underground power supply is the safest and neatest option. The cable inside the parasol centre pole simply needs to be connected to the underground cable on site. The connection itself is within the anchor tube and becomes invisible. The placement hinge makes installation easy. There is no risk of damaging cables. Cf. Page 94.

**W-MAY plug connector** art. no. 350930
Connects the power supply within the centre pole (cf. art. no. 200369 below) with a flexible underground cable. Can be used to install up to 8 slim lights or 20 LED bars. Use only for stationary parasol installation bases (e.g. SZ150).

Delivery includes: plug, socket and socket end cap. For on-site mounting with screw terminals for wires 0.75 – 4.0 mm². Clamping area of underground cable: 10 – 14 mm.
IP68, 3-pole, 250 V, 20 A, -40 °C to 100 °C. Colour: black.

**S1-MAY plug connector** art. no. 350107
Connects the power supply within the centre pole (cf. art. no. 200369 below) with a flexible underground cable. Can be used to install up to 4 heaters together with 8 slim lights or 4 heaters together with 20 LED bars. Use only for stationary parasol installation bases (e.g. SZ150).
Delivery includes: plug, socket and socket end cap. For on-site mounting by soldering or crimping wires 2.5 – 4.0 mm².
Clamping area of underground cable: Ø 14.0 mm to Ø 17 mm.
IP66, 6-pole, 400 V, 30 A, - 20 °C to 130 °C.

Schattello and Albatros:
Due to lack of sufficient space, the following 2 plug connectors - W-MAY and S1-MAY - cannot be inserted together in the parasol centre pole. Should it become necessary to run 2 cables in one pole (e.g. additional cables for loud-speakers), one of the cables must be fixed firmly, for example, with a lustre terminal and shrink tubing.

**External appliance plug** art. no. 200582
Special care needs to be taken for parasols on a mobile pedestal base. This appliance plug with Cekon socket and integrated RCD ensures appropriate protection. 5-pole, 400V. However, not suitable for ALBATROS with full frame pedestal or for parasols with tubular motor.



# Kit Components

**Internal 2-circuit wiring** art. no 200587
Usually, parasols with heaters require a 400 V connection. If no high voltage current is available, 2 x 230 V cabling can be installed. In that case a maximum of 4 heaters can be fitted.

**Power supply within centre pole** art. no 200369
Maximum safety is guaranteed by running the cabling through the support pole to the electrical harness. The risk of leakage or external hazards is thus minimized.

**Additional cable duct** art. no 200561
For Schattello, max.1 piece per parasol possible.

**Additional cable duct** art. no 200562
For Albatros, max.1 piece per parasol possible.

**Power supply along one of the spokes** art. no 202052
Electric current can be run along a parasol spoke, provided there is a nearby socket in the wall of the house at a height of min. 2.3 m. It is always necessary to plug or unplug the parasol before opening or closing it. Make sure that the cable hanging from the parasol does not bother any guests or passers-by. When ordering, please enclose a sketch showing from which spoke the cable is to be run.
Delivery includes: 1 m of cable to extend from a spoke end.
Plug and socket not included

200565 IP65

## 2. Current distribution

**Electrical harness**
Full wiring in accordance with the circuit system is skilfully enclosed in this inconspicuous electrical harness – no cable tangle. Just another contribution to the overall elegance of the eye-catching parasol.

**Electrical harness Schattello** art. no 200565
Adapter art. no. 200567 is necessary for Schattello sizes 2 x 4 m, 2.5 x 3.5 m, 2.5 x 4 m, 2.5 x 5 m,3 x 3 m, 3 x 4 m, 3 x 4.5 m, 3 x 5 m, 3 x 6 m, 4 x 6 m, 4 x 4 x 4 m, Ø 6 m 12 spokes.

**Electrical harness Albatros** art. no 200566

**Cabling**
Current is run directly from the electrical harness to the heater via special plug connectors to VDE rubber-sheathed cables. This material is safer and more durable for outdoor use than PVC.

**Cabling, long** art. no 200579
for swivelling holder art.no. 202040 (Schattello) and art. no. 200577 (Albatros).

**Cabling, short** art. no 200585
for swift-hold spar art. no. 200578.

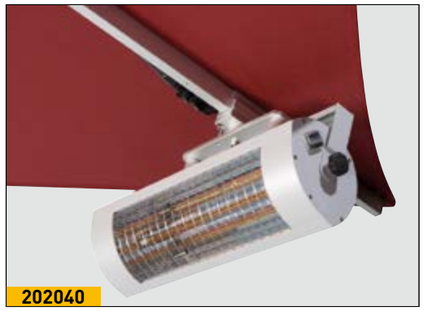
202040

200578

## 3. Mounting of heaters

**Swivelling holder**
The heaters are fixed onto the end of a spoke with a swivelling holder.Thanks to this innovative, patented mechanism the heaters can be turned 90° and remain mounted when the parasol is closed. No tiresome mounting and dismounting when opening and closing the parasol.

**Swivelling holder Schattello** art. no 202040
Not suitable for Ø 4 m, Ø 5 m, 2 x 2 m, 2.5 x 2.5 m, 3.5 x 3.5 m, 2 x 4 m, 2.5 x 3.5 m, 4 x 4 x 4 m and 6 x 6 x 6 m with valance. Alternative: opt for swift-fold spar, art. no 200578.

**Swivelling holder Albatros** art. no 200577
Not suitable for 3 x 6m, 3.5 x 7 m with valance, 4 x 6 m, 4 x 8 m with valance and 5 x 5.85 m with valance. Alternative: opt for swift-fold spar, art. no 200578.

**Swift-fold spar** art. no 200578
Whenever there is not enough space for swivelling holders, swift-fold spars are a welcome alternative. They are screwed directly on the distribution flange and can be folded down individually before parasol closure. Due to an integrated rotating coupler, it is not necessary to dismount the heaters beforehand.

200408 IP24

## 4. Infrared heaters

**Infrared radiant heater 1.400 W** art. no 200408
Conventional heating systems warm up the air. The heat slowly evolves and is gradually transmitted to customers outside - at considerable expense.

In bad weather conditions the warmth is blown away again before even reaching the customers. MAY infrared heaters warm only the surface at which they are directed, providing uniform, instant-on heat.

No energy- wasting warming-up process, so that customers very soon feel comfortably warm. Cosy warmth at the push of a button – in spite of any chilly breezes. All heaters have case-mounted switches and are TÜV- tested.

With W-MAY plug; 230 V, 50 Hz, TÜV-GS, splash-proof IP 24 (ENEC).

## 5. Safety and energy-saving options

**Automatic auxiliary cut out switch** art. no 202051
This automatic safety switch ensures that the heater cannot be accidentally switched on while the sunshade is closed. Thus heat will not be able to accumulate under the canopy covering, then causing damage or even setting the whole parasol on fire.

**Timer switch** art. no 202050
You wish to minimize running costs in the smoking area?
Your customers can activate each heater for 15 minutes by just pressing the pushbutton.
A small button – an enormous (saving) effect.

202050

## 6. Slim lights

The luminous body of the slim lights is completely embedded in the enclosure and is thus well-protected for outdoor use. 4, 6 or 8 slim lights, each running at 13 W, can be fitted to the parasol. The soft-coloured lights are screwed directly onto the main spokes.

**Slim light warm white** art. no 202090
2700° K; 13 Watt; IP65; The T5 light tube is exchangeable.

202090

## 7. LED lighting

Energy-efficient LED light bars (12 Volt) subtly fitted on the underside of the spokes. The 36 high-performance LEDs per bar are extremely durable, dimmable, waterproof, shock-resistant and powered by an upstream power supply unit. The number of LED bars to be mounted and the colour of the light can be determined by you.

A standard 12 V dimmer switch enables you to dim both power supply units from  0 % to 100 %. It is best to keep it in a handy place in the house, so that, with the help of a potentiometer, the light can be dimmed as required at any time.

**PSU for 4 LED bars** art. no. 350270
For the use of max. 4 LED bars on the parasol (each 12VDC/0.5A). IP64; 90-260VAC 50/60Hz input; 12VDC/2.5A output; internally dimmable: -25 %; temperature -20° to +50 °C; air-cooled.

Schattello:
Mounted on the telescopic tube at the factory. If a tubular motor is to be used, the 4-connection power supply unit must be installed on the outside wall or inside the house. In that case an additional 12V supply cable is needed for the parasol.

Albatros:
Installed in the electrical harness (art. no. 200566 extra order).

The combination "Heaters + loudspeakers + LED lighting" is only possible with a 400 Volt supply cable. Moreover, in this case, a maximum of 4 LED bars can be installed. This is due to the limited space for cables in the parasol centre pole.

**PSU for 20 LED bars** art. no. 350271

For the use of max. 20 LED bars on the parasol (each 12VDC/0.5A). The 20-connection power supply unit must be installed on the outside wall or inside the house. In that case an additional 12 V supply cable is needed for the parasol. IP65; 90-270VAC 50/60Hz input; 12VDC/11A output; internally dimmable: 10 - 100%; temperature -30° bis +70 °C; air-cooled.

Schattello + Albatros:
The 20-connection power supply unit must be installed on the outside wall or inside the house. In that case an additional 12 V supply cable is needed for the parasol.

General information on the 4-connection and 20-connection power supply units.
A standard 12 V dimmer switch enables you to dim both power supply units from 0 % to 100 %. It is best to keep it in a handy place in the house, so that, with the help of a potentiometer, the light can be dimmed as required at any time.

350274

350273

**LED bar, warm white** art. no. 350272
3'000-3'500° K; 36 LEDs; 12VDC/0.5A; LEDs power- controlled, fitted onto spoke

**LED bar, cold white** art. no. 350273
6'000-6'500° K; 36 LEDs; 12VDC/0.5A; LEDs power -controlled, fitted onto spoke.

202080

## 8. Stereo loud-speakers

art. no. 202080
Let your customers enjoy background music softly playing from two top -performance 8- Watt loud-speakers that are neatly incorporated in the electrical harness. This ingenious design concept is not only elegant and inconspicuous, it is also weather-protected and theft-proof. No need to detach the speakers when closing the parasol.

If only one parasol is to be fitted with an audio system, a stereo output with 8 Ohm loudspeaker impedance each is needed. For several parasols, the switching of the loudspeakers will have to be adjusted individually. The most relevant factors for the installation are the technical data of the hi-fi system and the position of the parasols. Please note that the use of 100V transformers may become necessary (approx. EUR 30.00 per parasol).

Audio cables are run through the centre of the support mast into the anchor tube.

## Guide to IP protection classification

**Safety instructions:**
Dimensioning and installation of electrical leads must be carried out by a certified electrician only.
Always protect your parasol with RCD and automatic cut-out.

**Protection level of electrical components:**
The quality of an electrified parasol largely depends on its level of protection. Think, for example, of squirting champagne or any similar unpredictable festivity occurrence and you will agree that "prevention is better than cure". The standard DIN EN 60529 titles so-called international protection (IP)classes.

IP-degree of protection: Example IP 65:
→ 2. Second digit
→ 1. First digit

| | **1. First digit:** | |
|---|---|---|
| IP-degree: | Protection against contact | Protection against foreign objects |
| 0 | no protection | no protection |
| 1 | large-area parts of the body (e.g. back of the hand) | large foreign objects (Ø 50 mm) |
| 2 | finger | medium-sized foreign objects (Ø > 12 mm) |
| 3 | tools and wires (Ø > 2.5 mm) | small foreign objects (Ø > 2.5 mm) |
| 4 | tools and wires (Ø > 1 mm) | grain-shaped foreign objects (Ø > 1 mm) |
| 5 | complete protection against contact | dust deposits |
| 6 | complete protection against contact | compl. protection against penetration of dust |

| | **2. Second digit:** |
|---|---|
| IP-degree: | Water |
| 0 | no protection |
| 1 | protection against vertically falling drops of water |
| 2 | protection against drops of water coming from an angle of up to 15° |
| 3 | protection against spraying water hitting the vertical surface from an angle of up to 60° |
| 4 | protection against water splashing from all directions |
| 5 | protection against jets of water |
| 6 | protection against strong jets of water |
| 7 | protection against temporary submersion in water |
| 8 | protection against long periods of submersion in water |

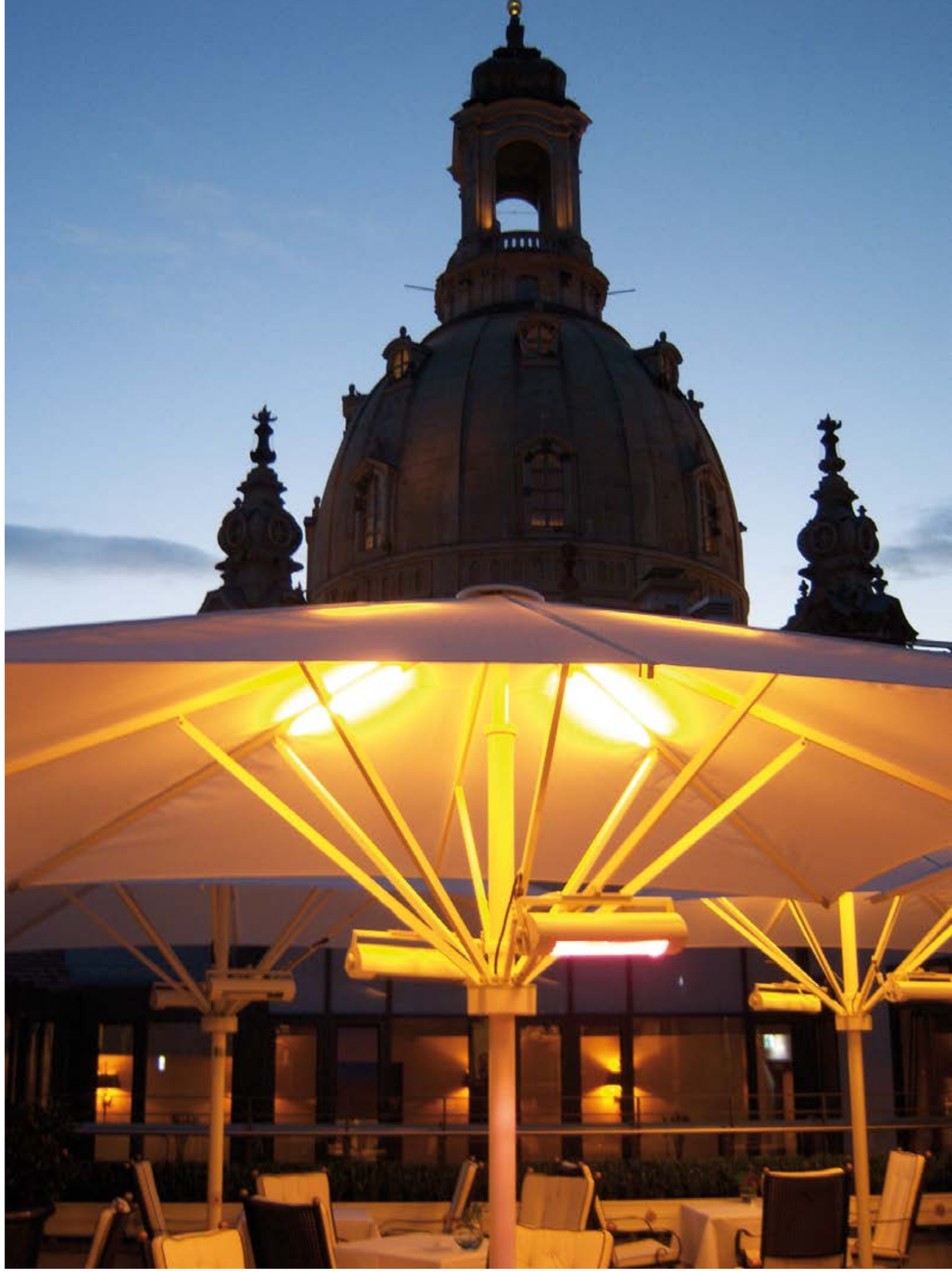

5-star superior Hotel Suitess in Dresden, facing the Church of Our Lady

## Customized design with side sheets

Side sheets provide all-weather protection and ward off side- winds. The Polyester material is durable and can be imprinted with any graphic design of your choice. Several variations are available, e.g. without windows, with windows or with a continuous light belt.

- All side sheets are of MayTex-Poly material.
- We recommend opting for parasols with valances if side sheets are to be used. Thus draughts through the space between the canopy and the side sheets can be avoided.
- Side sheets are fastened to the end of the spokes with specific holders.

It will therefore be necessary to order holders number FA141, SA140 or AA141, depending on your parasol type.

| | FILIUS | SCHATTELLO | ALBATROS |
|---|---|---|---|
| A300 | • | • | • |
| A303 | • | • | • |
| A306 | • | • | • |
| A309 | • | • | • |
| A312 | • | • | - |
| A315 | • | • | - |
| Roll-up door | • | • | • |

Side sheet holder

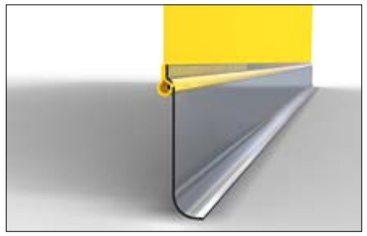
Variable bottom end of side sheet

Aluminium rod in textile pocket

Installation of side sheet variations B and A

The side sheets shown below extend across one side of the parasol and are fastened to the spokes.

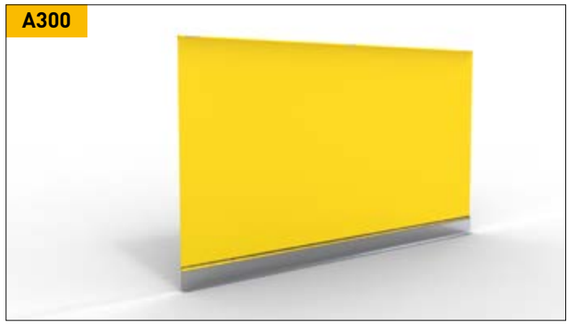

Side sheet without windows

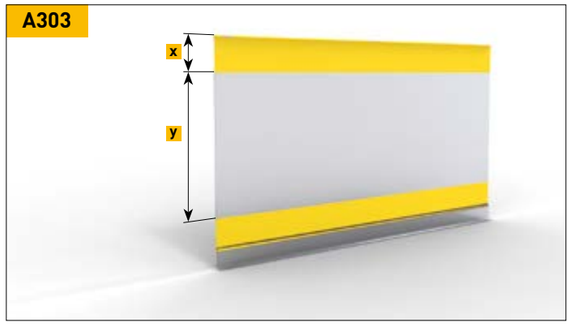

Side sheet with continuous light belt

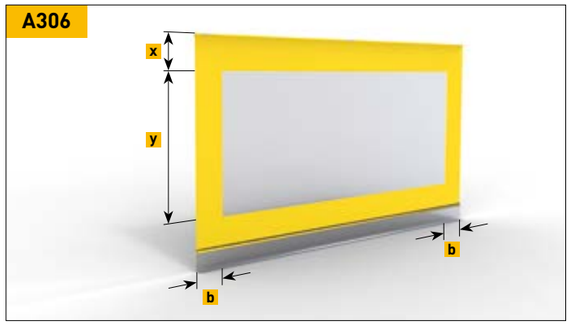

Side sheet with one window across one side

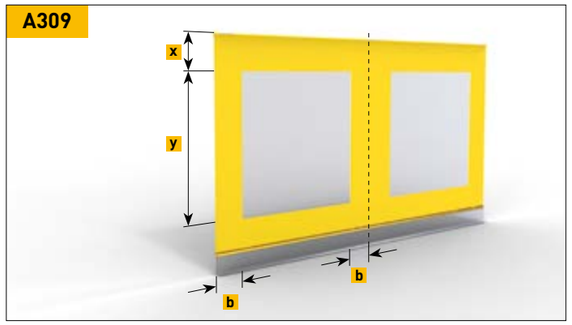

Side sheet with one window per segment

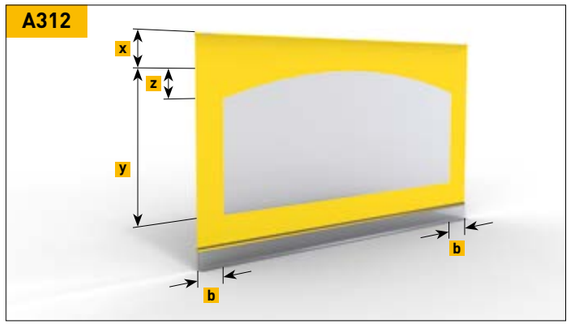

Side sheet with one arched window across one side

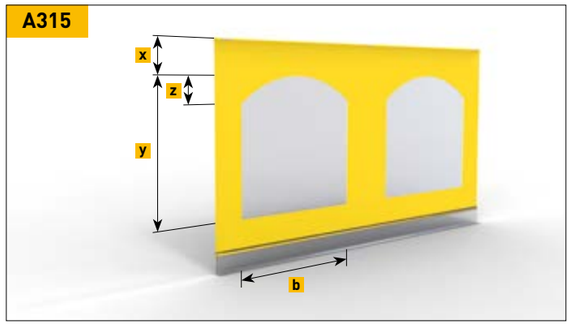

Side sheet with one arched window per segment

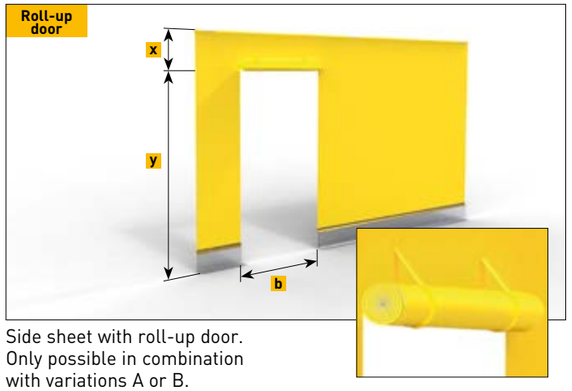

Side sheet with roll-up door.
Only possible in combination with variations A or B.

| | x in cm | y in cm | z in cm | b in cm |
|---|---|---|---|---|
| A303 | 35 | 135 | - | - |
| A306 | 35 | 135 | - | 30 |
| A309 | 35 | 135 | - | 30 |
| A312 | 35 | 135 | 25 | 30 |
| A315 | 35 | 135 | 25 | 120 |
| Roll-up door | 35 | 200 | - | 100 |

## **MayTex-Acryl** with Texgard impregnation

- 100% branded acrylic fibre, spun-dyed, weight approx. 300 g/m²
- high water tightness and water pressure resistance - 37 hPa (water column 370 mm)
- weather-proof, high and low temperature resistant
- rot-resistant
- effective protection against oil, grease, mildew and algae, industrial pollution, exhaust fumes and other negative environmental factors
- extremely high light and colour fastness
- tested acc. to Öko-Tex standard 100 as well as UV standard 801
- suitable for screen-printing


SA 314 010 white


SA 314 018 white/grey knopped

SA 314 008 ochre


SA 314 033 ivory

SA 314 580 white/yellow, grey knopped

SA 314 014 mandarin

SA 314 325 ecru

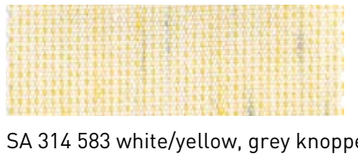
SA 314 583 white/yellow, grey knopped

SA 314 019 terracotta

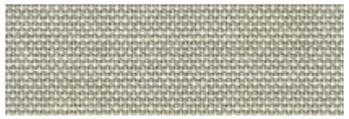
SA 314 044 grey/white

SA 314 045 pyrite

SA 314 002 orange

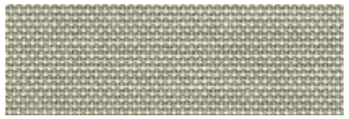
SA 314 364 telegrey/white

DA 7560 light yellow

SA 314 001 cherry

SA 314 471 silver-grey/dark brown knopped

SA 314 003 yellow

SA 314 347 ruby

SA 314 344 multi-color

SA 314 038 beige

SA 314 022 rust

SA 314 763 bordeaux

SA 314 011 royal blue

SA 314 271 navy blue/black

SA 314 362 dark green

SA 314 006 sapphire

SA 314 154 black

SA 314 257 green/black

SA 314 414 navy blue

## **Colour Fashion Collection 26**
MayTex-Acryl with Texgard impregnation

SA 314 016 dark brown

DA 8779 olive brown

DA 8203 blue basalt

DA 7559 taupe

SA 314 546 blue patina

SA 314 624 green patina

The shades shown here are not in accordance with the original ones. If requested, we will be pleased to send you a collection of original cloth samples.

## MayTex-Poly

- 100% Polyester (PES) one side acrylic-coated
- dirt and water repellent thanks to Teflon finish
- high water penetration and pressure resistance
- 70 hPa (water column 700 mm)
- good light and weather fastness (UV resistance)
- high tear and tensile strength
- light weight of approx. 200 g/m²
- UV801-tested


9577 white

9526 bright yellow

9793 blue


9823 ivory

9527 orange

9545 navy blue

9875 cream

9671 red

9710 dark green

9816 sand

9878 terracotta

9653 grey

9879 bordeaux

9853 black

9675 cherry

## PVC

- 100% high-tenacity Polyester fabric (PES)
- both-sided PVC surface coating with fungicidal treatment against mould infestation
- 100% waterproof
- high UV resistance and weatherability due to special surface sealing (top finish)
- resistant against high and low temperatures
- long-lasting attractive appearance
- scratch-resistant, easy-care, distortion-free
- easy to clean, even when mounted
- protection against UV rays
- high light and colour fastness
- ca. 380 g/m²

We also supply parasols with flame-retardant fabrics for indoor areas (DIN 4102 B1) on request.

The shades shown here are not in accordance with the original ones. If requested, we will be pleased to send you a collection of original cloth samples.





If no colour is specified, a binding tape will be chosen to match the cloth.


00 white

148 terracotta

79 mandarin

20 ivory

81 orange

63 blue

10 pyrite

82 red

62 royal blue

11 beige

85 cherry

66 sapphire


52 nature


86 bordeaux


91 navy blue

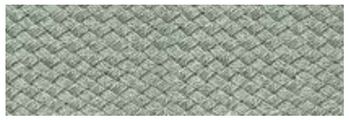
47 opal

83 rust

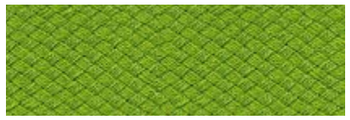
42 lime

18 silver

25 light brown

45 olive

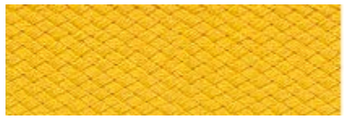
32 yellow

27 dark brown

44 grass-green

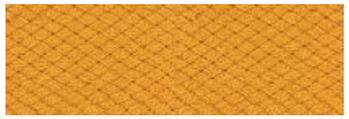
15 ochre

19 black

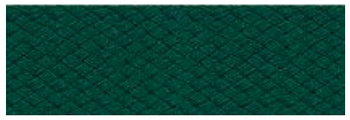
95 dark green

The textile finishing of a parasol canopy – i.e. the awning fabric – is not only the most important and most conspicuous feature of any sun protection system, it also fulfils numerous functions:

**Harmony**
through well-balanced colours.

**Joie de vivre**
through vibrant colours.

**Inner peace**
through natural shades of colour.

**Colour, light and shade-personal well-being, atmosphere and decoration**
The most comprehensive range of upmarket classics and specialities. The awning fabric keeps out the light. It protects, shades, creates atmosphere and serves as an element of design and decoration. The fabric evokes a sense of harmony and creates a feeling of well-being by filtering and tinting the light and thus lending a room and its environment a very special soothing atmosphere. The impact a fabric has on a person is decisively determined by its colour, pattern and degree of translucence.

## Healthy shade provider, protection from harmful UV radiation

The sun is a source of life and its light provides our bodies with essential vitamins, but it can also be very dangerous. Studies by the WHO indicate a threefold increase in skin diseases caused by harmful UV radiation. The UV Protection Factor (Sun Protection Factor) of our awning fabrics is a unit that indicates to what extent they increase the human skin's natural protection time to direct sunlight. The length of the natural protection of human skin depends on the skin type. All the designs in our collection have been tested and certified according to the latest and most stringent standard UV 801.

| | Sun Protection Factor | | | Effect on personal well-being | |
|---|---|---|---|---|---|
| | UV PROTECT 40 UV STANDARD 801 | UV PROTECT 60 UV STANDARD 801 | UV PROTECT 80 UV STANDARD 801 | Joie de vivre | Inner peace |
| **MayTex-Acryl UNI** | | | | | |
| SA 314 001, SA 314 002, SA 314 003, SA 314 011, SA 314 014 | | | (80) | • | |
| SA 314 006, SA 314 008, SA 314 016, SA 314 019 SA 314 022, SA 314 038, SA 314 044, SA 314 045, SA 314 154, SA 314 257, SA 314 271, SA 314 344, SA 314 347, SA 314 362, SA 314 364, SA 314 414, SA 314 546, SA 314 624, SA 314 763 | | | (80) | | • |
| SA 314 325, SA 314 471, SA 314 583 | | (60) | | | • |
| SA 314 010, SA 314 580, SA 314 018, SA 314 033 | (40) | | | | • |
| DA 7560 | | (60) | | • | • |
| DA 7559, DA 8203 | | (60) | | | • |
| DA 8779 | (40) | | | | • |
| **VALMEX MayTex-Poly** | | | (80) | | |

## How high is your personal protection factor? Type 1- 6

| Type | Characteristics | Reaction of the unprotected skin to 30 mins. radiation in June | The human skin´s natural protection time | Protection time of the skin when shaded by a parasol | | |
|---|---|---|---|---|---|---|
| | | | | | | |
| 1 | light skin, freckles, fair or red hair, blue or green eyes | always sunburn no tan | 5-10 minutes | 200-400 minutes | 300-600 minutes | 400-800 minutes |
| 2 | light skin, fair hair, blue or green eyes | always sunburn a slight tan | 10-20 minutes | 400-800 minutes | 600-1200 minutes | 800-1600 minutes |
| 3 | dark hair, blue eyes | slight sunburn a good tan | 20-30 minutes | 800-1200 minutes | 1200-1800 minutes | 1600-2400 minutes |
| 4 | dark skin,dark or black hair, brown eyes | no sunburn a good tan | ca. 45 minutes | ca. 1800 minutes | ca. 2700 minutes | ca. 3600 minutes |
| 5 | dark skin, black hair, dark eyes | no sunburn | ca. 60 minutes | ca. 2400 minutes | ca. 3600 minutes | ca. 4800 minutes |
| 6 | black skin, black hair, black eyes | no sunburn | ca. 90 minutes | ca. 3600 minutes | ca. 5400 minutes | ca. 7200 minutes |

## Product properties of awning fabrics

Parasol cloths are high-performance products. However, given the requirements that have to be met in the field of environmental protection, there is a limit to the degree of perfection that can be achieved in spite of present-day state-of-the-art production and processing. As a result, customers may occasionally lodge complaints regarding certain features that can appear on the cloth. Such features neither alter the value of the product, nor do they impair its usability in any way. As we feel committed to providing full consumer information and thus hope to avoid irritation or dissatisfaction, we should like to draw your attention to the following features:

**Crease marks**
Crease marks may appear during the production process or when folding the parasol fabric. When held against the light, cloths – particularly those of a light colour – may appear to have a dark streak in the crease.

**Chalk effect**
Light chalk-like stripes may arise during the processing of materials. Although the greatest of care is taken, they cannot always be totally avoided. They should, however, not be cause for complaint.

**Water/rain resistance**
Acrylic awnings are impregnated with a water-repelling finish and can withstand short periods of light rainfall if treated with proper care. During lengthy periods of rainfall or heavy downpours, however, the parasol should remain closed in order to prevent any material damage. If the cloth becomes wet, the awning should be opened again as soon as possible to allow it to dry.

**Abrasion marks**
In the course of time abrasion may weaken the canopy fabric and thus impair its quality. This can be avoided by pulling the cloth between the spokes when closing the parasol and then securing it with a strap to prevent flapping.

**Cleaning instructions**
If requested, we will be pleased to forward our information sheet titled "Cleaning the awning fabric".

**Characteristic features of our sewing yarn:**
- high tensile strength
- optimum abrasion resistance
- well-balanced elongation property
- high thermal resilience
- good light and weather fastness
- tested acc. to Öko-Test Standard 100

**Canopy covering**
Canopy covers can be manufactured from the range of cloths described. If requested, we can also supply canopies with alternating segment colours (1/4 division or 1/8 division).

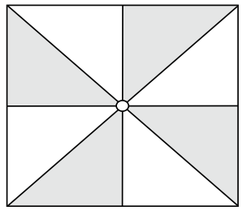

*1/8-division*

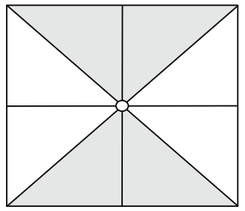

*1/4-division*

**Bordering**
The canopy covering is trimmed with high-quality awning acrylic edge binding (red in the photograph). If not specified otherwise, the border will be chosen to match the colour of the canopy fabric.

*Example of bordering*

**Valance DeLuxe**
All-round in-vogue design. The recessed valance position prevents rainwater from flowing down over the advertising surface, i.e. no stains. Moreover, the valance can no longer be turned up by wind and rain. DeLuxe is the optimum solution for clearly visible, clean ad-printing. Please note that height measurements of SCHATTELLO and ALBATROS parasols with DeLuxe valances must be reduced by 10 cm.

*DeLuxe valance*

## Screw-in ground anchor

The screw-in ground anchor has proven ideal for state-of-the-art foundations. No digging, no concreting necessary. Below: a chart showing that groundscrew installation is more time and cost efficient than concreting

| Concreting | Ground screw installation |
|---|---|
| Installation workers have to make two journeys because of waiting time for concrete to cure. | Just one person comes to take a soil sample. The next time, the screw-in ground anchor is installed. No installation waiting-time. |
| concrete, gravel and water needed. | only the ground screw needed. |
| soil excavation necessary. | installed with a special groundscrew driver. |
| costs of excavation and disposal of spoil. | soil is only shaken up and shifted somewhat. |
| cannot be relocated. | relocation possible. |
| surrounding area spoiled by excavation work. | surrounding area remains unspoiled. |
| weather-dependent. | installation possible even in frosty ground. |

*National Garden Show 2011, Koblenz*

upper anchor tube

screw-in ground anchor

# Product information

Basically, the installation system consists of two components: the screw-in ground anchor and the parasol upper anchor tube.

**Screw-in ground anchor**
The ground screw is driven vertically down into the ground until the flange plate is absolutely level with the ground.  Due to the conical shape of the shaft, the soil is compressed, providing maximum stability and security. With the help of a Krinner driver, screw-in anchors can be installed into ground up to soil class 4. Special installation machinery may be necessary for higher soil classes.

**Upper anchor tube**
The upper anchor tube is fastened to the flange plate of the ground screw with three screws. By means of three adjusting screws the parasol pole is aligned into an upright position.

**Environmentally-friendly**
The entire surroundings remain unspoiled and in original condition, so there is no surface area coverage.

**Statics Test**
To eliminate any risks, parasols installed with screw-in ground anchors and upper anchor tubes have been static-tested for use in soil classes 3–7 and windforce 4.

**Preparatory measures**
Before placing your order, please make sure that there are no gas, water, power or other supply lines in the vicinity of the designated spot for the ground screw that could be damaged during installation. Customers are required in advance to declare their own responsibility and liability concerning this matter in writing.

**Installation machinery**
For information and services concerning installation machinery for screw-in ground anchors please contact one of the "Krinner Groundscrew" trade partners at: www.krinner.com

You will require the following Krinner attachment: Z1 Attachment F 1234567.

A company employee will first pay an on-site visit to take a soil sample. This will determine whether your screw-in ground anchor can be installed with a groundscrew driver or if special installation machinery is needed. Installation costs will depend on the services required.

# Ground screw installation in 5 steps

approx. 30 minutes for steps 1-5

**1. Soil removal and pre-drilling**
Remove any paving and gravel to a depth of approx. 15 cm. Using a 40 mm drill, pre-drill vertically into the designated installation spot.

**2. Preparation**
In preparation for the 2 m screw-in ground anchor, a smaller, approx. 1.2 m screw must be driven into the ground and then removed again.

**3. Installation**
Drive the 2 m ground screw into the pre-drilled hole until it is flush with the ground. If several parasols are to be installed, use a levelling instrument to make sure that all ground screws are flush.

**4. Aligning**
Screw on the upper anchor tube with an open-end wrench and hex key, then align vertically with adjusting screws so that the mounted parasol is upright.

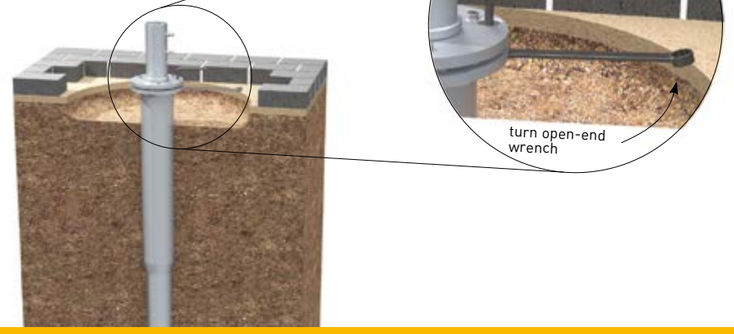


**5. Final step**
Fill up with gravel and lay paving stones right close to the flange plate so that the ground screw itself becomes invisible.

# Elegance and Business

**The in- vogue combination for successful on-site marketing**

Print your ads on parasol valances and you will keep at eye level with your customers. Large-scale graphic designs on the parasol canopy serve as conspicuous advertising media – no matter from what angle you regard them.

And when the shade is closed in bad weather or in winter, just slip on a protective cover printed with ads of your choice to achieve an imposing off-season marketing effect.

All measurements in this catalogue are to be understood as approximate. Intermediate and special sizes on request. We reserve the right to make technical modifications to improve our products.

# Summer, Sun – MAY

Please feel free to contact us for additional information.

Москва: +7 (495) 580-58-45
Санкт-Петербург: +7 (812) 249-45-51, 249-45-52
Сочи: +7 (918) 608-51-00

Почтовый адрес и шоу-рум:
194223, Санкт-Петербург, пр. Мориса Тореза, дом 44, корпус 2, офис 29Н

Адреса складов:
Москва ул. Автомоторная, дом 2Б
Санкт-Петербург, п. Шушары, территория предприятия =Детскосельское⁰,
участок №50, (Колпинский), складской терминал.

www.5805845.ru
E-mail: team@5805845.ru

Changes in the construction are left in the course of the advancement · © in 2014/02 May Gerätebau GmbH · No liability with misprints · The shades shown here are not in accordance with the original ones.